PIE Tech

POLLACHI INSTITUTE OF ENGINEERING AND TECHNOLOGY

(Approved by **AICTE** and Affiliated to **Anna University**)

sky is the limit

Department of Electronics and Communication Engineering

Regulation 2021

II Year – III Semester

EC3353- Electronic Devices and Circuits

Electronic Devices and Circuits

1.1 PN DIODE

After having known about various components, let us focus on another important component in the field of electronics, known as a Diode. A semiconductor diode is a two terminal electronic component with a PN junction. This is also called as a Rectifier.

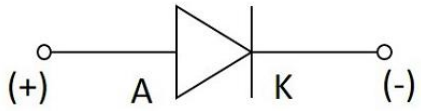

Symbol of a Diode

The anode which is the positive terminal of a diode is represented with A and the cathode, which is the negative terminal is represented with K. To know the anode and cathode of a practical diode, a fine line is drawn on the diode which means cathode, while the other end represents anode.

Representing anode and cathode of a practical diode through its symbol

As we had already discussed about the P-type and N-type semiconductors, and the behavior of their carriers, let us now try to join these materials together to see what happens.

Formation of a Diode

If a P-type and an N-type material are brought close to each other, both of them join to form a junction, as shown in the figure below.

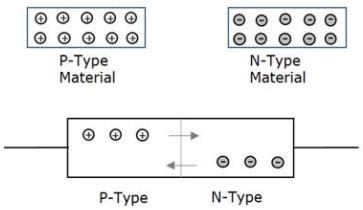

A P-type material has holes as the majority carriers and an N-type material has electrons as the majority carriers. As opposite charges attract, few holes in P-type tend to go to n-side, whereas few electrons in N-type tend to go to P-side.

As both of them travel towards the junction, holes and electrons recombine with each other to neutralize and forms ions. Now, in this junction, there exists a region where the positive and negative ions are formed, called as PN junction or junction barrier as shown in the figure.

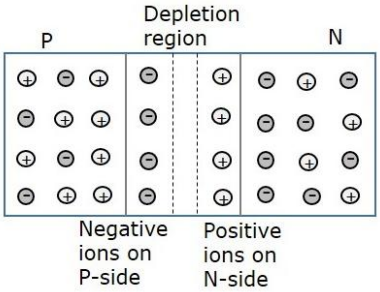

The formation of negative ions on P-side and positive ions on N-side results in the formation of a narrow charged region on either side of the PN junction. This region is now free from movable charge carriers. The ions present here have been stationary and maintain a region of space between them without any charge carriers.

As this region acts as a barrier between P and N type materials, this is also called as Barrier junction. This has another name called as Depletion region meaning it depletes both the regions. There occurs a potential difference VD due to the formation of ions, across the junction called as Potential Barrier as it prevents further movement of holes and electrons through the junction.

Biasing of a Diode

When a diode or any two-terminal component is connected in a circuit, it has two biased conditions with the given supply. They are Forward biased condition and Reverse biased condition. Let us know them in detail.

Forward Biased Condition

When a diode is connected in a circuit, with its anode to the positive terminal and cathode to the negative terminal of the supply, then such a connection is said to be forward biased condition. This kind of connection makes the circuit more and more forward biased and helps in more conduction. A diode conducts well in forward biased condition.

Reverse Biased Condition

When a diode is connected in a circuit, with its anode to the negative terminal and cathode to the positive terminal of the supply, then such a connection is said to be Reverse biased condition. This kind of connection makes the circuit more and more reverse biased and helps in minimizing and preventing the conduction. A diode cannot conduct in reverse biased condition.

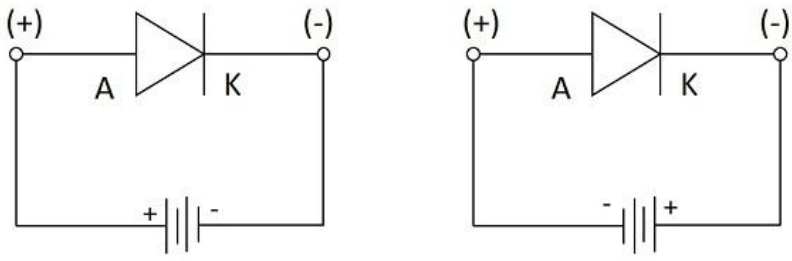

Forward biased Connection

Reverse biased Connection

Let us now try to know what happens if a diode is connected in forward biased and in reverse biased conditions.

Working under Forward Biased

When an external voltage is applied to a diode such that it cancels the potential barrier and permits the flow of current is called as forward bias. When anode and cathode are connected to positive and negative terminals respectively, the holes in P-type and electrons in N-type tend to move across the junction, breaking the barrier. There exists a free flow of current with this, almost eliminating the barrier.

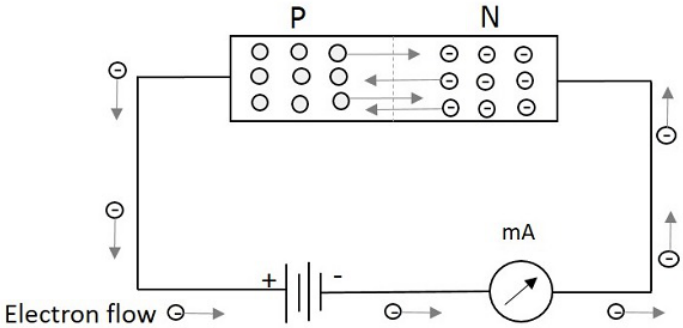

PN junction forward biased

With the repulsive force provided by positive terminal to holes and by negative terminal to electrons, the recombination takes place in the junction. The supply voltage should be such high that it forces the movement of electrons and holes through the barrier and to cross it to provide forward current.

Forward Current is the current produced by the diode when operating in forward biased condition and it is indicated by If.

Working under Reverse Biased

When an external voltage is applied to a diode such that it increases the potential barrier and restricts the flow of current is called as Reverse bias. When anode and cathode are connected to negative and positive terminals respectively, the electrons are attracted towards the positive terminal and holes are attracted towards the negative terminal. Hence both will be away from the potential barrier increasing the junction resistance and preventing any electron to cross the junction.

The following figure explains this. The graph of conduction when no field is applied and when some external field is applied are also drawn.

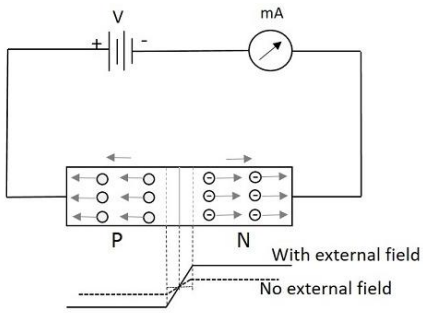

PN junction reverse biased

With the increasing reverse bias, the junction has few minority carriers to cross the junction. This current is normally negligible. This reverse current is almost constant when the

temperature is constant. But when this reverse voltage increases further, then a point called reverse breakdown occurs, where an avalanche of current flows through the junction. This high reverse current damages the device.

Reverse current is the current produced by the diode when operating in reverse biased condition and it is indicated by Ir. Hence a diode provides high resistance path in reverse biased condition and doesn't conduct, where it provides a low resistance path in forward biased condition and conducts. Thus we can conclude that a diode is a one-way device which conducts in forward bias and acts as an insulator in reverse bias. This behavior makes it work as a rectifier, which converts AC to DC.

Peak Inverse Voltage

Peak Inverse Voltage is shortly called as PIV. It states the maximum voltage applied in reverse bias. The Peak Inverse Voltage can be defined as "The maximum reverse voltage that a diode can withstand without being destroyed". Hence, this voltage is considered during reverse biased condition. It denotes how a diode can be safely operated in reverse bias.

Purpose of a Diode

A diode is used to block the electric current flow in one direction, i.e. in forward direction and to block in reverse direction. This principle of diode makes it work as a Rectifier.

For a circuit to allow the current flow in one direction but to stop in the other direction, the rectifier diode is the best choice. Thus the output will be DC removing the AC components. The circuits such as half wave and full wave rectifiers are made using diodes, which can be studied in Electronic Circuits tutorials.

A diode is also used as a Switch. It helps a faster ON and OFF for the output that should occur in a quick rate.

V - I Characteristics of a Diode

A Practical circuit arrangement for a PN junction diode is as shown in the following figure. An ammeter is connected in series and voltmeter in parallel, while the supply is controlled through a variable resistor.

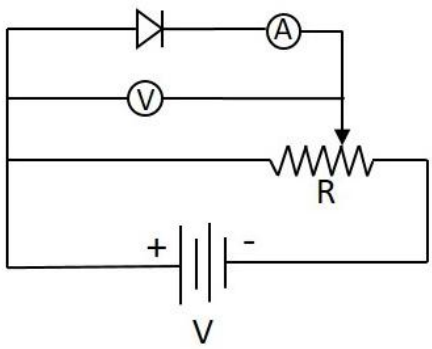

A Practical diode circuit

During the operation, when the diode is in forward biased condition, at some particular voltage, the potential barrier gets eliminated. Such a voltage is called as Cut-off Voltage or Knee Voltage. If the forward voltage exceeds beyond the limit, the forward current rises up exponentially and if this is done further, the device is damaged due to overheating.

The following graph shows the state of diode conduction in forward and reverse biased conditions.

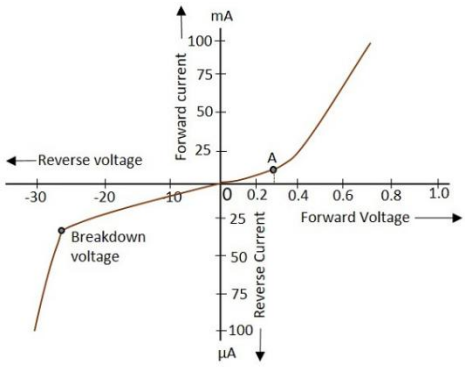

During the reverse bias, current produced through minority carriers exist known as “Reverse current”. As the reverse voltage increases, this reverse current increases and it suddenly breaks down at a point, resulting in the permanent destruction of the junction.

1.2 RECTIFIERS

An alternating current has the property to change its state continuously. This is understood by observing the sine wave by which an alternating current is indicated. It raises in its positive direction goes to a peak positive value, reduces from there to normal and again goes to negative portion and reaches the negative peak and again gets back to normal and goes on.

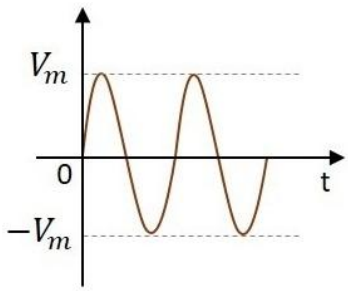

During its journey in the formation of wave, we can observe that the wave goes in positive and negative directions. Actually it alters completely and hence the name alternating current.

But during the process of rectification, this alternating current is changed into direct current DC. The wave which flows in both positive and negative direction till then, will get its direction restricted only to positive direction, when converted to DC. Hence the current is allowed to flow only in positive direction and resisted in negative direction, just as in the figure below.

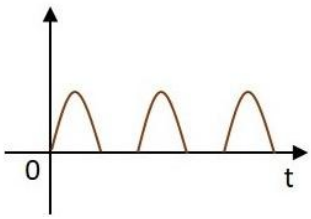

The circuit which does rectification is called as a Rectifier circuit. A diode is used as a rectifier, to construct a rectifier circuit.

Types of Rectifier circuits

There are two main types of rectifier circuits, depending upon their output. They are

Half-wave Rectifier

Full-wave Rectifier

A Half-wave rectifier circuit rectifies only positive half cycles of the input supply whereas a Full-wave rectifier circuit rectifies both positive and negative half cycles of the input supply.

Half-Wave Rectifier

The name half-wave rectifier itself states that the rectification is done only for half of the cycle. The AC signal is given through an input transformer which steps up or down according to the usage. Mostly a step down transformer is used in rectifier circuits, so as to reduce the input voltage.

The input signal given to the transformer is passed through a PN junction diode which acts as a rectifier. This diode converts the AC voltage into pulsating dc for only the positive half cycles of the input. A load resistor is connected at the end of the circuit. The figure below shows the circuit of a half wave rectifier.

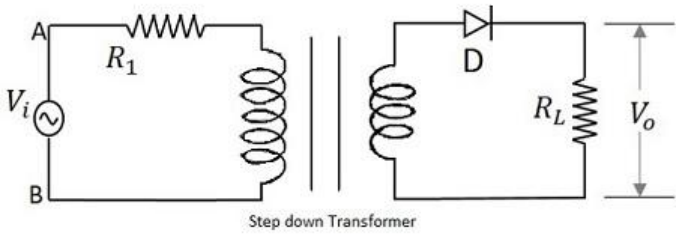

Working of a HWR

The input signal is given to the transformer which reduces the voltage levels. The output from the transformer is given to the diode which acts as a rectifier. This diode gets ON conducts for positive half cycles of input signal. Hence a current flows in the circuit and there will be a voltage drop across the load resistor. The diode gets doesn't conduct for negative half cycles and hence the output for negative half cycles will be, iD=Vo=0.

Hence the output is present for positive half cycles of the input voltage only neglectingthereverseleakagecurrentneglectingthereverseleakagecurrent. This output will be pulsating which is taken across the load resistor.

Waveforms of a HWR

The input and output waveforms are as shown in the following figure.

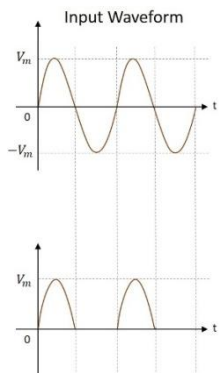

Hence the output of a half wave rectifier is a pulsating dc. Let us try to analyze the above circuit by understanding few values which are obtained from the output of half wave rectifier.

Center-tapped Full-Wave Rectifier

A rectifier circuit whose transformer secondary is tapped to get the desired output voltage, using two diodes alternatively, to rectify the complete cycle is called as a Center-tapped Full wave rectifier circuit. The transformer is center tapped here unlike the other cases.

The features of a center-tapping transformer are −

The tapping is done by drawing a lead at the mid-point on the secondary winding. This winding is split into two equal halves by doing so.

The voltage at the tapped mid-point is zero. This forms a neutral point.

The center tapping provides two separate output voltages which are equal in magnitude but opposite in polarity to each other.

A number of tapings can be drawn out to obtain different levels of voltages.

The center-tapped transformer with two rectifier diodes is used in the construction of a Center-tapped full wave rectifier. The circuit diagram of a center tapped full wave rectifier is as shown below.

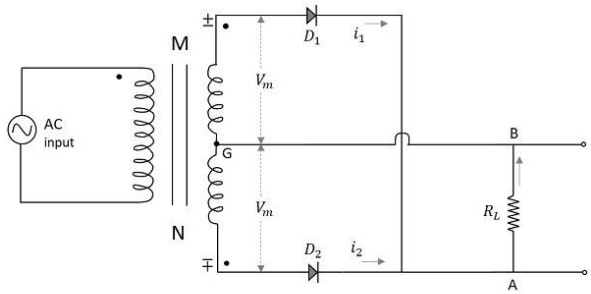

Circuit diagram of a center-tapped full wave rectifier

Working of a CT- FWR

The working of a center-tapped full wave rectifier can be understood by the above figure. When the positive half cycle of the input voltage is applied, the point M at the transformer secondary becomes positive with respect to the point N. This makes the diode D1D1forward biased. Hence current i1i1 flows through the load resistor from A to B. We now have the positive half cycles in the output

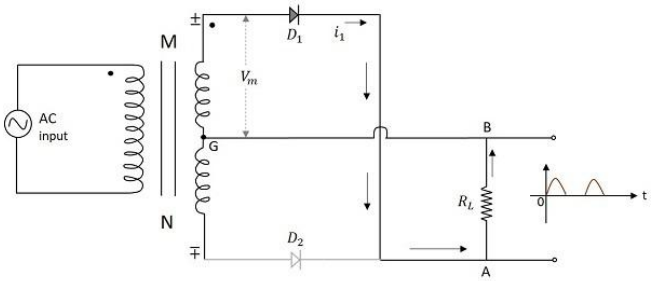

When the negative half cycle of the input voltage is applied, the point M at the transformer secondary becomes negative with respect to the point N. This makes the

diode D2D2 forward biased. Hence current i2i2 flows through the load resistor from A to B. We now have the positive half cycles in the output, even during the negative half cycles of the input.

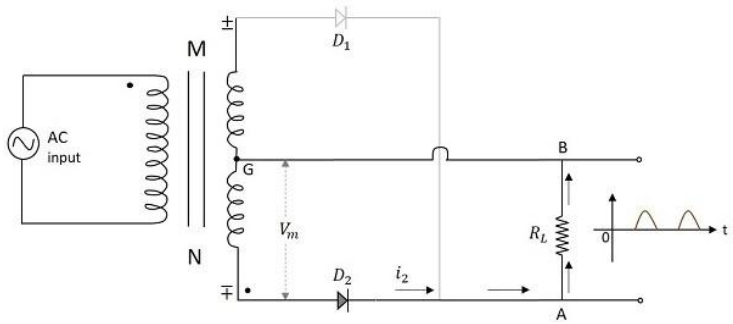

Waveforms of CT FWR

The input and output waveforms of the center-tapped full wave rectifier are as follows.

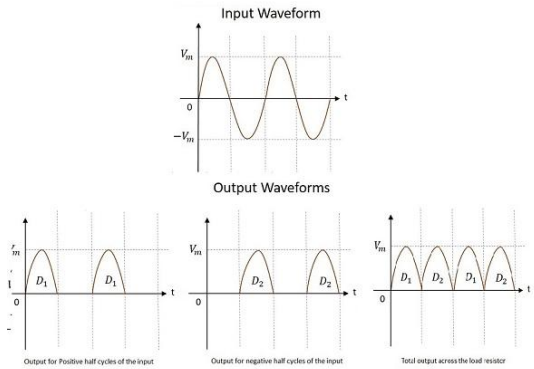

From the above figure it is evident that the output is obtained for both the positive and negative half cycles. It is also observed that the output across the load resistor is in the same direction for both the half cycles.

Bridge Full-Wave Rectifier

This is such a full wave rectifier circuit which utilizes four diodes connected in bridge form so as not only to produce the output during the full cycle of input, but also to eliminate the disadvantages of the center-tapped full wave rectifier circuit.

There is no need of any center-tapping of the transformer in this circuit. Four diodes called D1, D2, D3 and D4 are used in constructing a bridge type network so that two of the diodes conduct for one half cycle and two conduct for the other half cycle of the input supply. The circuit of a bridge full wave rectifier is as shown in the following figure.

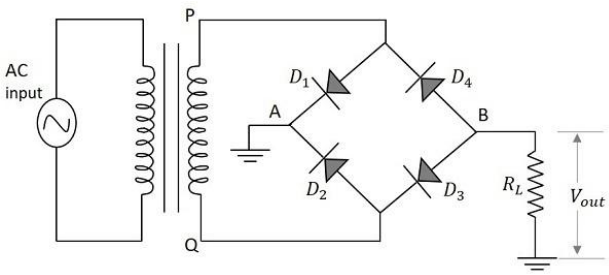

Working of a Bridge Full-Wave Rectifier

The full wave rectifier with four diodes connected in bridge circuit is employed to get a better full wave output response. When the positive half cycle of the input supply is given, point P becomes positive with respect to the point Q. This makes the diode D1 and D3 forward biased while D2 and D4 reverse biased. These two diodes will now be in series with the load resistor.

The following figure indicates this along with the conventional current flow in the circuit.

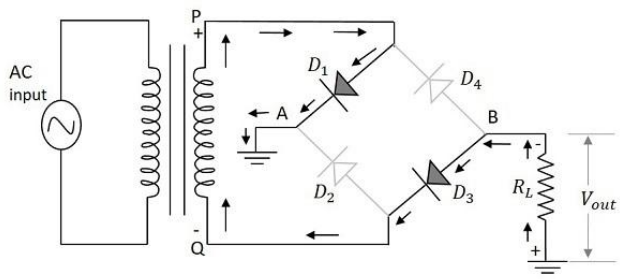

Hence the diodes D1 and D3conduct during the positive half cycle of the input supply to produce the output along the load resistor. As two diodes work in order to produce the output, the voltage will be twice the output voltage of the center tapped full wave rectifier.

When the negative half cycle of the input supply is given, point P becomes negative with respect to the point Q. This makes the diode D1 and D3 reverse biased while D2 and D4 forward biased. These two diodes will now be in series with the load resistor.

The following figure indicates this along with the conventional current flow in the circuit.

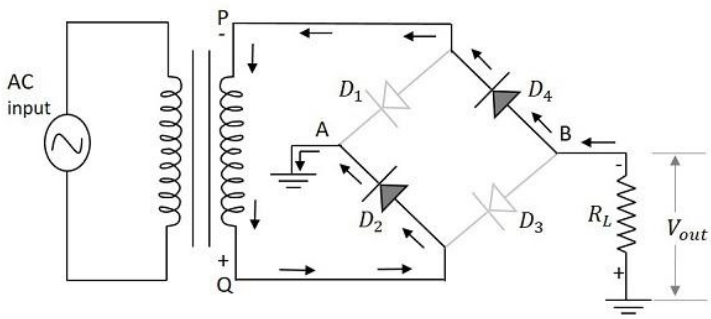

Hence the diodes D2 and D4 conduct during the negative half cycle of the input supply to produce the output along the load resistor. Here also two diodes work to produce the output voltage. The current flows in the same direction as during the positive half cycle of the input.

Waveforms of Bridge FWR

The input and output waveforms of the center-tapped full wave rectifier are as follows.

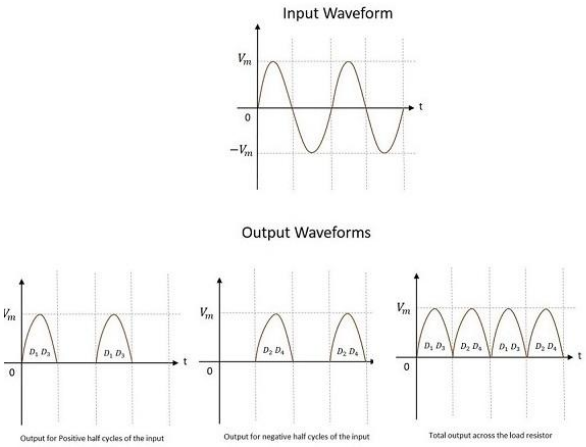

From the above figure, it is evident that the output is obtained for both the positive and negative half cycles. It is also observed that the output across the load resistor is in the same direction for both the half cycles.

1.3 CLIPPER

An electronic device that is used to evade the output of a circuit to go beyond the present value (voltage level) without varying the remaining part of the input waveform is called as clipper

Working of Clipper Circuit

The clipper circuit can be designed by utilizing both the linear and nonlinear elements such as resistors, diodes or transistors. As these circuits are used only for clipping input waveform as per the requirement and for transmitting the waveform, they do not contain any energy storing element like a capacitor.

In general, clippers are classified into two types: Series Clippers and Shunt Clippers.

Series Clippers

Series clippers are again classified into series negative clippers and series positive clippers which are as follows:

Series Negative Clipper

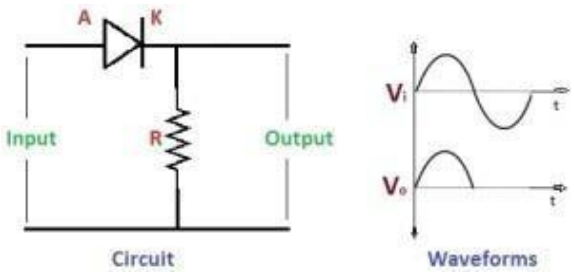

Figure Series Negative Clipper

The above figure shows a series negative clipper with its output waveforms. During the positive half cycle the diode (considered as ideal diode) appears in the forward biased and conducts such that the entire positive half cycle of input appears across the resistor connected in parallel as output waveform. During the negative half cycle the diode is in reverse biased. No output appears across the resistor. Thus, it clips the negative half cycle of the input waveform, and therefore, it is called as a series negative clipper.

Series Positive Clipper

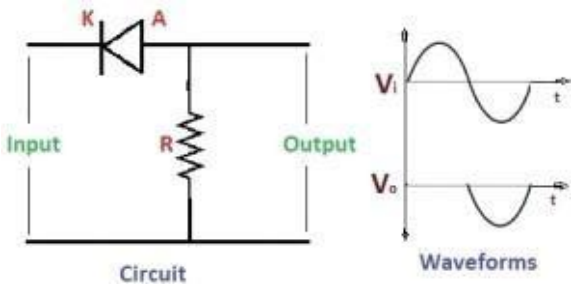

Figure Series Positive Clipper

The series positive clipper circuit is connected as shown in the figure. During the positive half cycle, diode becomes reverse biased, and no output is generated across the resistor, and during the negative half cycle, the diode conducts and the entire input appears as output across the resistor.

Shunt Clippers

Shunt clippers are classified into two types: shunt negative clippers and shunt positive clippers.

Shunt Negative Clipper

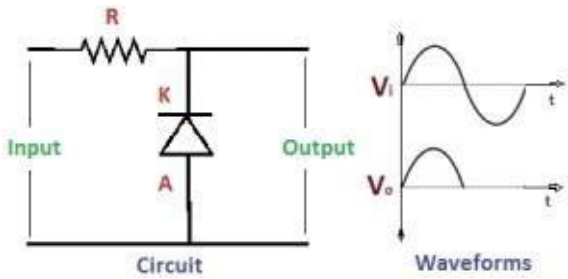

Figure Shunt Negative Clipper

Shunt negative clipper is connected as shown in the above figure. During the positive half cycle, the entire input is the output, and during the negative half cycle, the diode conducts causing no output to be generated from the input.

Shunt Positive Clipper

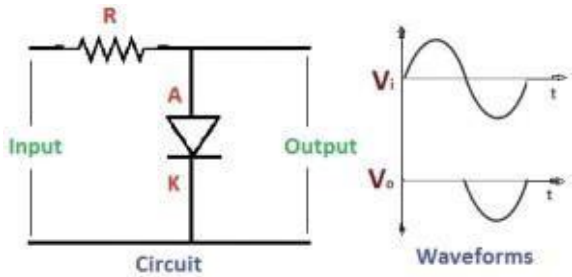

Figure Shunt Positive Clipper

During the positive half cycle the diode is in conduction mode and no output is generated; and during the negative half cycle; entire input appears as output as the diode is in reverse bias as shown in the above figure.

Applications of Clippers

- They are frequently used for the separation of synchronizing signals from the composite picture signals.
- The excessive noise spikes above a certain level can be limited or clipped in FM transmitters by using the series clippers.
- For the generation of new waveforms or shaping the existing waveform, clippers are used.
- The typical application of diode clipper is for the protection of transistor from transients, as a freewheeling diode connected in parallel across the inductive load.
- Frequently used half wave rectifier in power supply kits is a typical example of a clipper. It clips either positive or negative half wave of the input.
- Clippers can be used as voltage limiters and amplitude selectors.

1.4 CLAMPER CIRCUIT

An electronic circuit that is used to alter the positive peak or negative peak of the input signal to a definite value by shifting the entire signal up or down to obtain the output signal peaks at desired level is called as Clamper circuit.

Working of Clamper Circuit

The positive or negative peak of a signal can be positioned at the desired level by using the clamping circuits. As we can shift the levels of peaks of the signal by using a clamper, hence, it is also called as level shifter.

The clamper circuit consists of a capacitor and diode connected in parallel across the load. The clamper circuit depends on the change in the time constant of the capacitor. The capacitor must be chosen such that, during the conduction of the diode, the capacitor must be sufficient to charge quickly and during the nonconducting period of diode, the capacitor should not discharge drastically. The clampers are classified as positive and negative clampers based on the clamping method.

Negative Clamper

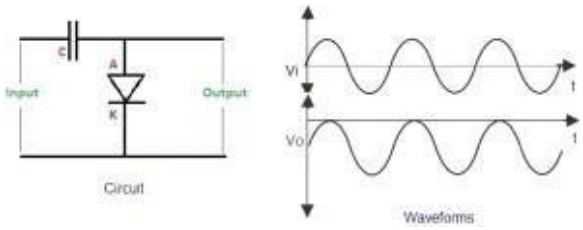

Figure Negative Clamper

During the positive half cycle, the input diode is in forward bias- and as the diode conducts-capacitor gets charged (up to peak value of input supply). During the negative half cycle, reverse does not conduct and the output voltage become equal to the sum of the input voltage and the voltage stored across the capacitor.

Positive Clamper

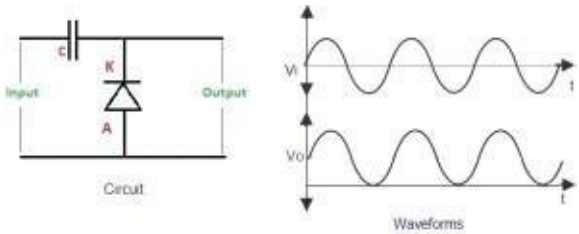

Figure Positive Clamper

It is almost similar to the negative clamper circuit, but the diode is connected in the opposite direction. During the positive half cycle, the voltage across the output terminals becomes equal to the sum of the input voltage and capacitor voltage (considering the capacitor as initially fully charged). During the negative half cycle of the input, the diode starts conducting and charges the capacitor rapidly to its peak input value. Thus the waveforms are clamped towards the positive direction as shown above.

Applications of Clampers

- The complex transmitter and receiver circuitry of television clamper is used as a base line stabilizer to define sections of the luminance signals to preset levels.
- Clampers are also called as direct current restorers as they clamp the wave forms to a fixed DC potential.
- These are frequently used in test equipment, sonar and radar systems.
- For the protection of the amplifiers from large errant signals clampers are used.
- Clampers can be used for removing the distortions
- For improving the overdrive recovery time clampers are used.
- Clampers can be used as voltage doublers or voltage multipliers.

1.5 ZENER DIODE

A Zener diode is a type of diode that permits current not only in the forward direction like a normal diode, but also in the reverse direction if the voltage is larger than the breakdown voltage known as "Zener knee voltage" or "Zener voltage". The device was named after Clarence Zener, who discovered this electrical property.

Figure Diode symbol

However, the Zener Diode or "Breakdown Diode" as they are sometimes called, are basically the same as the standard PN junction diode but are specially designed to have a low pre-determined Reverse Breakdown Voltage that takes advantage of this high reverse voltage. The point at which a zener diode breaks down or conducts is called the "Zener Voltage" (Vz).

The Zener diode is like a general-purpose signal diode consisting of a silicon PN junction. When biased in the forward direction it behaves just like a normal signal diode passing the rated current, but when a reverse voltage is applied to it the reverse saturation current remains fairly constant over a wide range of voltages.

The reverse voltage increases until the diodes breakdown voltage VB is reached at which point a process called Avalanche Breakdown occurs in the depletion layer and the current flowing through the zener diode increases dramatically to the maximum circuit value (which is usually limited by a series resistor). This breakdown voltage point is called the "zener voltage" for zener diodes.

The point at which current flows can be very accurately controlled (to less than 1% tolerance) in the doping stage of the diodes construction giving the diode a specific *zenerbreakdown voltage*, (Vz) ranging from a few volts up to a few hundred volts. This zenerbreakdown voltage on the I-V curve is almost a vertical straight line.

ZENER DIODE CHARACTERISTICS

The Zener Diode is used in its "reverse bias" or reverse breakdown mode, i.e. the diodes anode connects to the negative supply. From the I-V characteristics curve above, we can see that the zener diode has a region in its reverse bias characteristics of almost a constant negative voltage regardless of the value of the current flowing through the diode and remains nearly constant even with large changes in current as long as the zener diodes current remains between the breakdown current IZ(min) and the maximum current rating IZ(max).

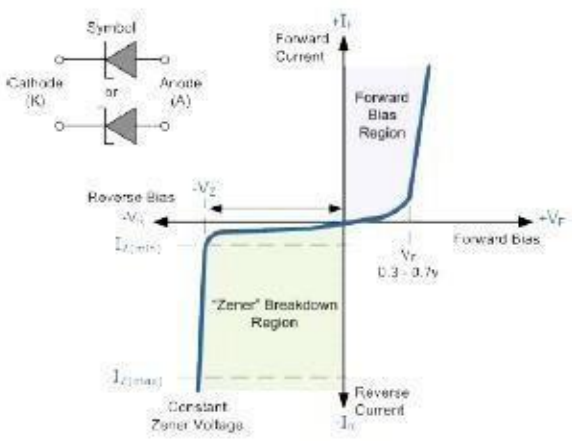

Figure VI characteristics of Zener Diode

1.6 LASERDIODE

A laser diode is nothing but the p-n junction combined with an optical resonator. This p- n junction constitutes a diode and it is operated in forward bias. The applied current generates the photons at the junction and further collision results the emission of more photons. If the carrier density within the p-n junction surpasses a certain value the light generated will be amplified and will finally yield the laser emission.

One of the peculiarity of the laser light is given as, it is monochromatic in nature, which means that it consists of a single color. So it is referred to as coherent light which means that a light with a single wavelength. In the case of incoherent light, it has a wide band of wavelengths.

Laser Diode Symbol

The given figures show the symbol and basic construction of a laser diode. A laser diode consists of p-n junction which is made up of two doped gallium arsenide layers. The two ends are flat as well as parallel to each other. One end is highly reflective (mirror) and the other one is partially reflective in nature. The depletion layer length depends on the wavelength of the emitted light.

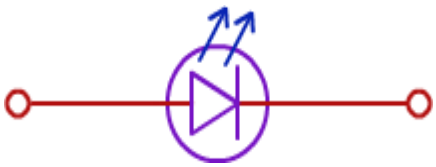

Figure Circuit Symbol of LASER diode

Construction

Fig shows the structure of an edge emitting laser diode. this type of structures' called febry-perot laser. As seen from the fig , a PN junction is formed by two layer of doped gallium arsenide(GaAs). The length of the PN junction bears a precise relation ship with the wave length of the light to be emitted. As seen there is a highly reflective surface at one endof the junction and a partially reflective surface at the other end .external leads provide the anode and cathode connections

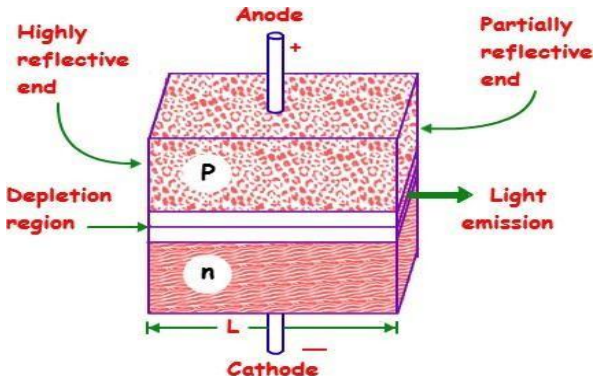

Figure Construction of LASER diode

Laser Diode Theory Basics

There are three main processes in semiconductors that are associated with light:

- *Light absorption:* Absorption occurs when light enters a semiconductor and its energy is transferred to the semiconductor to generate additional free electrons and holes. This effect is widely used and enables devices like to photo-detectors and solar cells to operate.
- *Spontaneous emission:* The second effect known as spontaneous emission occurs in LEDs. The light produced in this manner is what is termed incoherent. In other words the frequency and phase are random, although the light is situated in a given part of the spectrum.
- *Stimulated emission:* Stimulated emission is different. A light photon entering the semiconductor lattice will strike an electron and release energy in the form of another light photon. The way in which this occurs releases this new photon of identical wavelength and phase. In this way the light that is generated is said to be coherent.

Laser Diode Working

The working principle of laser diode is given below. If the diode is set to be in forward bias using an external source, the electrons cross the junction and combine with the hole as in normal diodes. During this process, photons were released. These newly released photons collide with other atoms which causes further production of photons. If we increase the forward bias current more photons are produced due to the collision of each other. Some of the photons reflected back from the depletion region, during the reflection again collide with other atoms and produce the photons. These reflections and generation of new photons results the intense laser beam and this beam pass through the partially reflected area of the p-n junction.

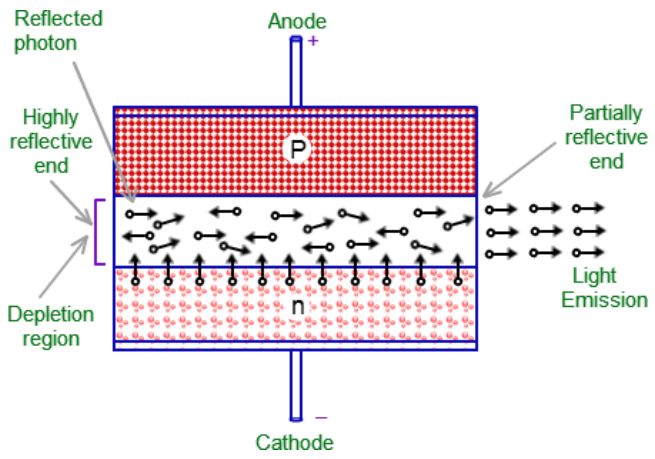

Figure Working of LASER diode

Characteristics of Laser Diode

Threshold current is the most important and basic parameter for laser diodes. Incident spontaneous emission light propagating to the reflection mirror is amplified by stimulated emission and comes back to initial position after a round trip inside the laser cavity.

This process is subject to losses arising from light going through or diffracting at the reflection mirrors and scattering or absorption within an active light emitting medium. Light get attenuated if the total loss is greater than the gain. Injected current helps to strengthens the amplification light in the laser diode and when the gain and loss are balanced, initial light intensity becomes equal to the returned light intensity, this condition is referred to as a threshold.

A diode laser oscillates above the threshold when the gain is high enough Output power is one of the important parameters to characterize a diode laser. The figure shows an experimental result, which depicts the output power of a typical continuous wave in a semiconductor diode laser as a function of injection current.

When the forward bias current is low, the laser diode operates like a light emitting diodes (LEDs) where the carrier density in the active layer is not high enough for population inversion, spontaneous emission is dominated in this region. As the bias increases, population inversion occurs, stimulated emission becomes dominant at a certain bias current, the current at this point is called threshold current. The injection current above the threshold induces the abrupt onset of laser action and coherent light is emitted from the diode laser. The laser threshold current is evaluated by extrapolating the linear part of the

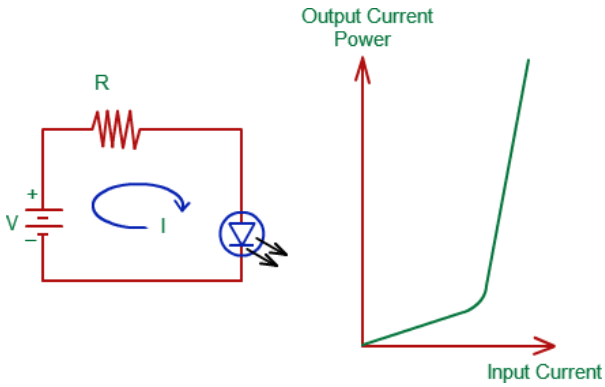

characteristic to zero output power.

Figure Forward characteristics of LASER Diode

Advantages:

Power capability: Laser diodes are able to provide power levels from a few milliwatts right up to a few hundreds of watts.

Efficiency: Laser diode efficiency levels can exceed 30%, making laser diodes a particularly efficient method of generating coherent light.

Coherent light: The very nature of a laser is that it generates coherent light. This can be focussed to a diffraction limited spot for high density optical storage applications.

Rugged construction: Laser diodes are completely solid state and do not require fragile glass elements or critical set-up procedures. Accordingly they are able to operate under harsh conditions.

Compact: Laser diodes can be quite small allowing for laser diode technology to provide a very compact solution.

Variety of wavelengths: Using the latest technology and a variety of materials, laser diode technology is able to generate light over a wide spectrum. The use of blue light having a

short wavelength allows for tighter focussing of the image for higher density storage.

Modulation: It is easy to modulate a laser diode, and this makes laser diode technology ideal for many high data rate communications applications. The modulation is achieved by directly modulating the drive current to the laser diode. This enables frequencies up to several GHz to be achieved for applications such as high-speed data communications.

Application

The use of LASER is in medical equipment used in surgery and in consumer product like compact disk(CD)Player, laser printers, hologram scanners etc

Some of the applications of laser diode is given below:

1. To make measuring equipments
2. Pumping of fibre and solid state lasers
3. Medical equipments
4. Printing technology
5. Lighting
6. Material processing
7. For scientific research.

1.7 LIGHT EMITTING DIODE

A Light Emitting Diode (LED) is a special type of PN junction diode. The light emitting diode is specially doped and made of a special type of semiconductor. This diode can emit light when it is in the forward biased state. Aluminum indium gallium phosphide (AlInGaP) and indium gallium nitride (InGaN) are two of the most commonly used semiconductors for LED technologies. Older LED technologies used gallium arsenide phosphide (GaAsP), gallium phosphide (GaP), and aluminum gallium arsenide (AlGaAs). LEDs generate visible radiation by electroluminescence phenomenon when a low-voltage direct current is applied to a suitably doped crystal containing a p-n junction, as shown in the diagram below.

The doping is typically carried out with elements from column III and V of the periodic table. When a forward biased current, I_F, energizes the p-n junction, it emits light at a wavelength defined by the active region energy gap, E_g.

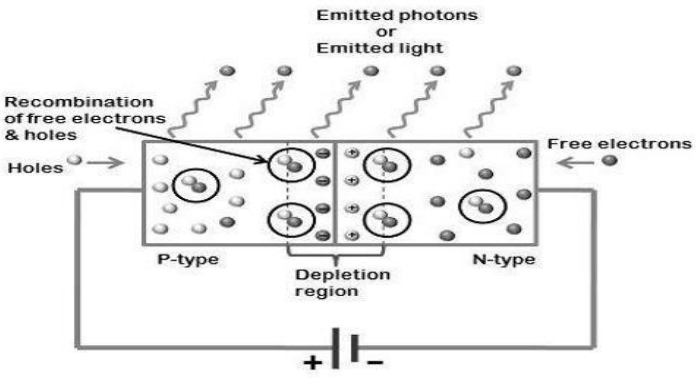

Figure Working of LED

When the forward biased current I_F is applied through the p-n junction of the diode, minority carrier electrons are injected into the p-region and corresponding minority carrier electrons are injected into the n-region. Photon emission occurs due to electron-hole recombination in the p-region.
Electron energy transitions across the energy gap, called radiative recombinations, produce photons (i.e., light), while shunt energy transitions, called non-radiative recombinations, produce phonons (i.e., heat). Different colours are emitted by LEDs fabricated by different special semiconductors which are listed below.

- Gallium Arsenide (GaAs) – infrared
- Gallium Arsenide Phosphide (GaAsP) – red to infrared, orange
- Aluminium Gallium Arsenide Phosphide (AlGaAsP) – high-brightness red, orange-red, orange, and yellow
- Gallium Phosphide (GaP) – red, yellow and green
- Aluminium Gallium Phosphide (AlGaP) – green
- Gallium Nitride (GaN) – green, emerald green
- Gallium Indium Nitride (GaInN) – near ultraviolet, bluish-green and blue
- Silicon Carbide (SiC) – blue as a substrate
- Zinc Selenide (ZnSe) – blue

1.8 LIQUID CRYSTAL DISPLAY

As the name indicates Liquid Crystals exists in a state between crystalline (solid) and isotropic (liquid) state. Among many phases, Nematic is a simplest form of liquid

crystal phase which is employed in LCD technology.

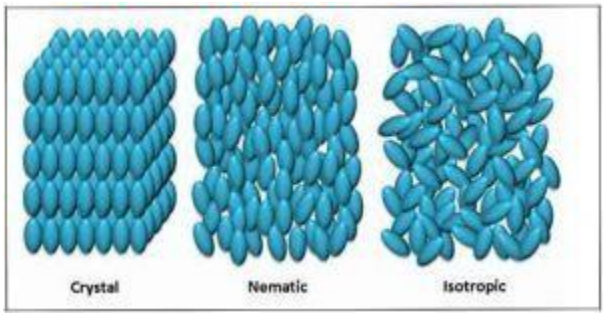

Figure Liquid Crystal Phases

Molecules of liquid crystal are long and cylindrical in shape. Each molecules in a plane are arranged in such a way that the major axis of each molecules are parallel to each other. Orientation of molecules in each plane will be slightly different from the molecular orientation of adjacent planes as shown in the below diagram. This difference in molecular orientation in different planes will cause twisting the polarization of lights when it passes through it.

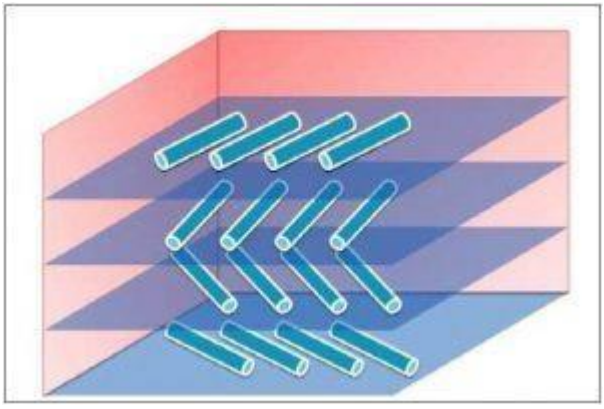

Figure Orientation of Molecules – Liquid Crystal

Liquid crystals are affected by electric field, when we apply a voltage it will react and change its arrangement. This unique behavior of liquid crystals made the key to LCDs.

ON Pixel or Segment

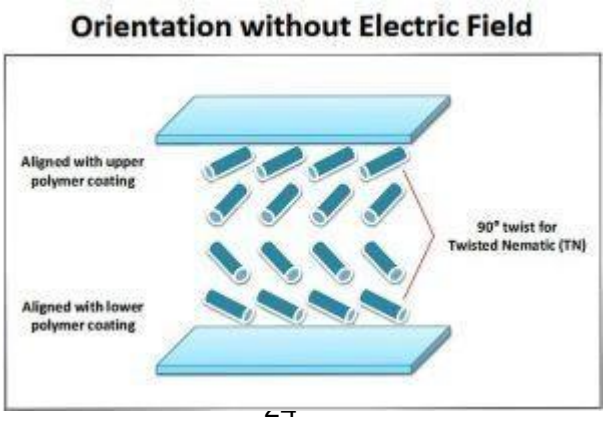

Figure Liquid Crystal – Orientation without Electric Field

In the above image we can see that molecules in each plane have different orientation without electric fields. So the polarization of light changes when it passes through liquid crystal without electric field.

OFF Pixel or Segment

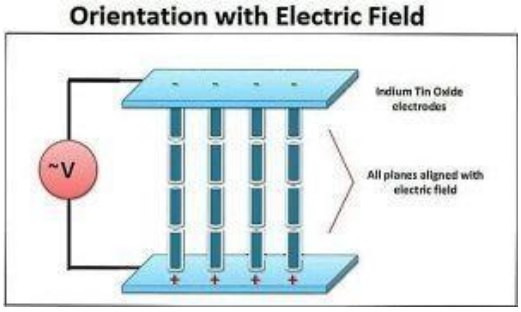

Figure Liquid Crystal – Orientation with Electric Field

When an electric field is applied, we can see that all the molecules are arranged parallel to the same axis. So there will not be any change in the polarization of light when it passes through liquid crystal in an electric field.

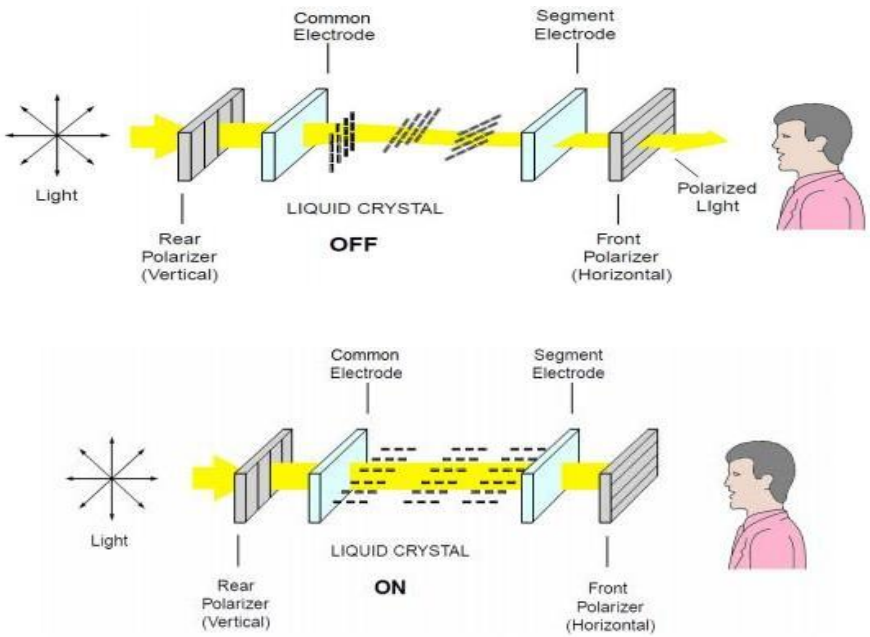

Figure Transmissive Displays

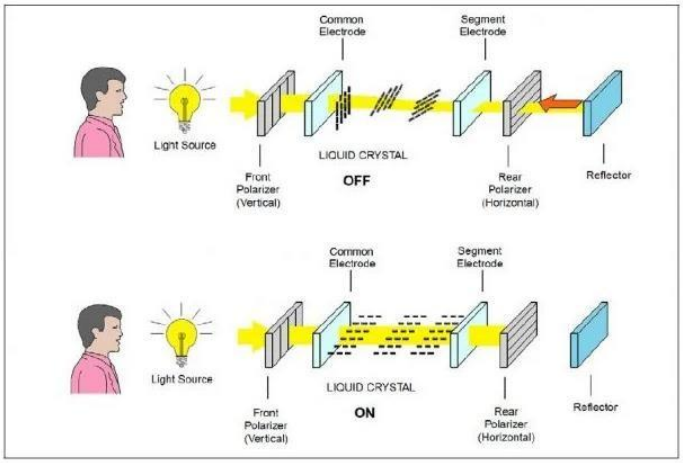

Figure Reflective Displays

1.9 CHARGE COUPLED DEVICE

Charge-coupled device, known as CCD, is another very popular photodetector commonly used for digital imaging and video (Theuwissen, 1995). Unlike a pn junction-based photodiode, CCD is based on a metal-oxide-semiconductor (MOS) structure.

The CCD structure with a p-type semiconductor body, a thin silicon dioxide insulating layer and an array of gating electrodes is shown in the figure. A positive bias voltage applied on a gate electrode repels holes away from the area underneath the electrode, creating a depletion region. Incoming photons are able to generate photoelectrons in the depletion region as illustrated in the Figure.

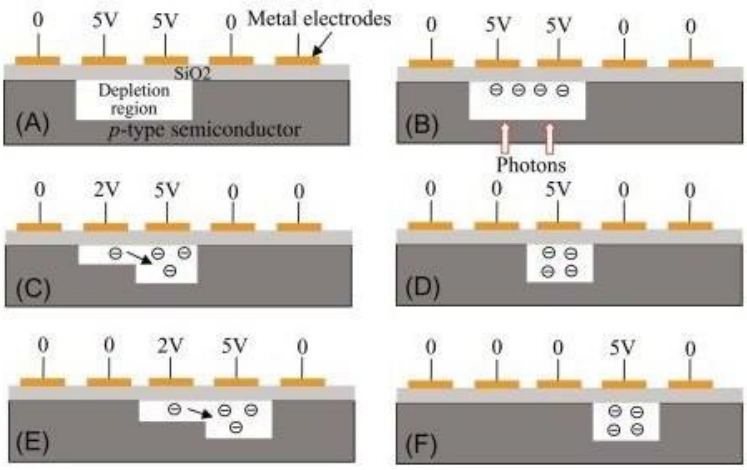

Figure Working of charge coupled device

These photon- induced charges are then shifted programmably in the horizontal direction to one side of the array so that they can be electrically amplified and collected. Charge shifting can be accomplished by progressively shifting gate voltage along the array. The gating electrodes of CCD made for imaging are usually arranged in a two- dimensional

(2D) array. As the imaging sensor, CCD is usually mounted on the focal plane of a camera. After each exposure, a charge distribution pattern is created on the 2D plane of the CCD, which is proportional to the intensity distribution of the image. The readout circuits of CCD performs a parallel to series conversion. The row-shifter circuit shifts the charges recorded by each row downward in the vertical direction into horizontal registers. Corresponding to each step of row shift, the pixel shifter circuit moves the charge stored in the horizontal registers pixel-by-pixel in the horizontal direction into a preamplifier. This process effectively translates the 2D image array into a waveform in the time domain, which can then be digitized, processed, and recorded.

1.10 LIGHT DEPENDENT RESISTOR

The construction of an LDR includes a light-sensitive material Cadmium Sulfide that is placed on an insulating substrate like as ceramic. The material is placed in a zigzag shape in order to get the required power rating and resistance

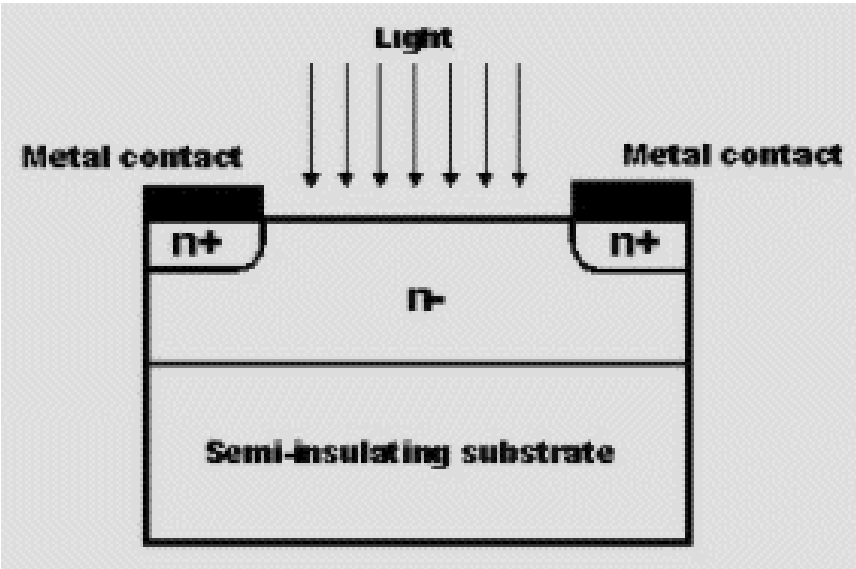

Figure Internal Structure of LDR

This resistor works on the principle of photo conductivity. It is nothing but, when the light falls on its surface, then the material conductivity reduces and also the electrons in the valence band of the device are excited to the conduction band. These photons in the incident light must have energy greater than the band gap of the semiconductor material. This makes the electrons to jump from the valence band to conduction.

These devices depend on the light, when light falls on the LDR then the resistance decreases, and increases in the dark. When a LDR is kept in the dark place, its resistance is high and, when the LDR is kept in the light its resistance will decrease.

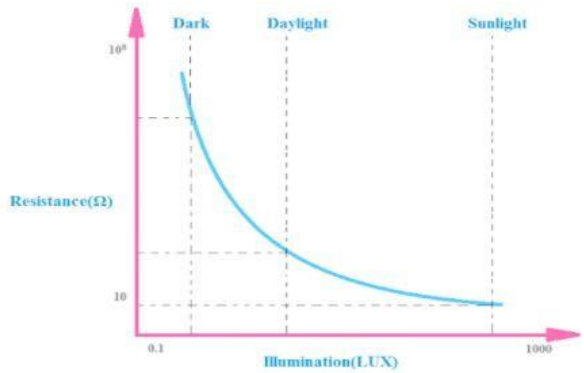

Characteristics of LDR

1.11 PHOTO TRANSISTOR

A Photo transistor is a semiconductor device which can sense the light and alter the current flow between emitter and collector terminals .A photo transistor is a three terminal device made of semiconductor material Gallium Arsenide. The three terminals of the photo transistor are Emitter, Base and collector where the base terminal is disconnected.

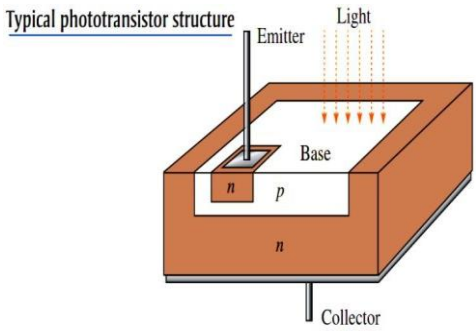

Figure Internal Structure of phototransistor

The phototransistor uses the basic bipolar transistor concept as the basis of its operation. In fact a phototransistor can be made by exposing the semiconductor of an ordinary transistor to light. Very early photo transistors were made by not covering the plastic encapsulation of the bipolar transistor with black paint.

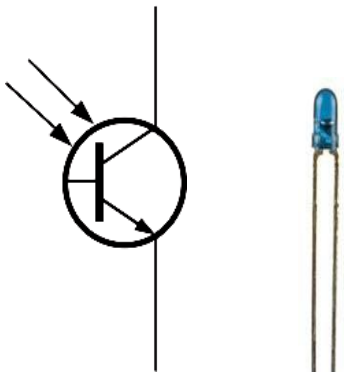

Figure Circuit symbol and a typical photo transistor

The photo-transistor operates because light striking the semiconductor frees electrons / holes and causes current to flow in the base region. Photo-transistors are operated in their active regime, although the base connection is generally left open circuit or disconnected because it is often not required. The base of the photo transistor would only be used to bias the transistor so that additional collector current was flowing and this would mask any current flowing as a result of the photo-action. For operation the bias conditions are quite simple. The collector of an NPN transistor is made positive with respect to the emitter or negative for a PNP transistor. The light enters the base region where it causes hole electron pairs to be generated. This generation mainly occurs in the reverse biased base-collector junction. The hole- electron pairs move under the influence of the electric field and provide the base current, causing electrons to be injected into the emitter.

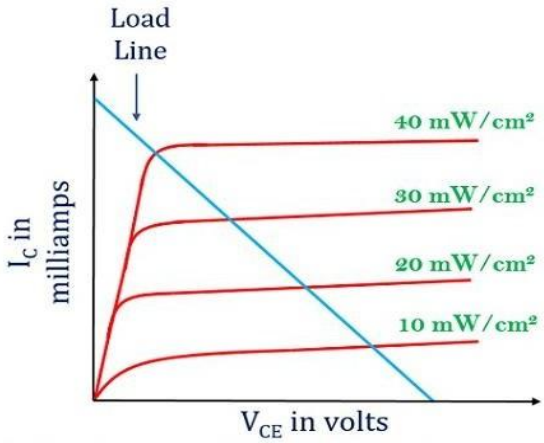

Figure Characteristics of Photo Transistor

1.12 SOLAR CELL

A simple solar cell is a pn junction diode. The n region is heavily doped and thin so that the light can penetrate through it easily. The p region is lightly doped so that most of the depletion region lies in the p side. Electron hole pairs (EHPs) are mainly created in the depletion region and due to the built-in potential and electric field, electrons move to the n region and the holes to the p region. When an external load is applied, the excess electrons travel through the load to recombine with the excess holes. Electrons and holes are also generated with the p and n regions

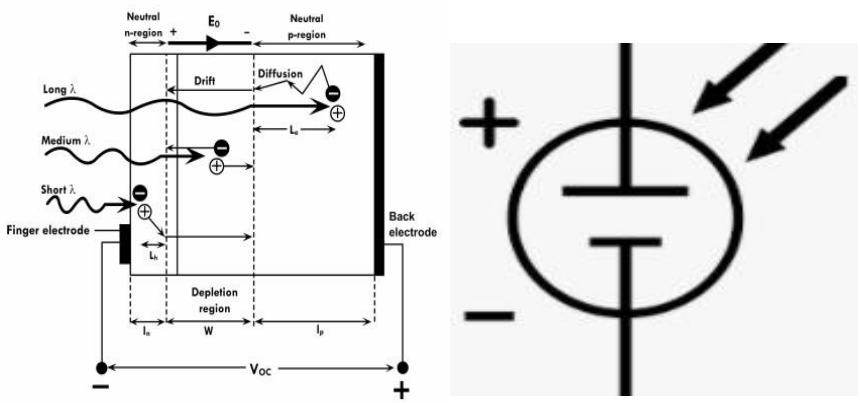

Figure Circuit Symbol of Solar Cell

The current at which maximum power occurs Im. The voltage at which maximum power occurs Vm. Efficiency is defined as the ratio of maximum electrical power output to the radiation power input to the cell and it is expressed in percentage.

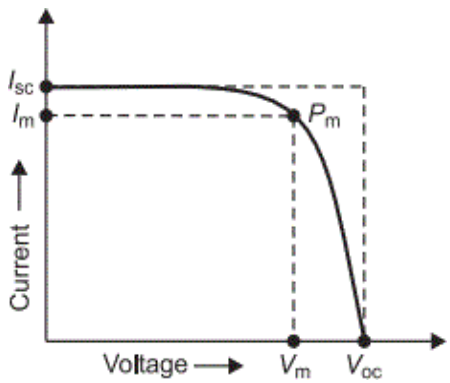

Figure VI Characteristics of Solar Cell

1.13 OPTOCOUPLER

An optocoupler is a device that transfers electrical signals between two electrically isolated circuits through light energy. The system is protected from any external light, except the light coming from the LED. Initially, no voltage is applied to the LED; hence the LED does not glow. In this condition as no light falls on the photo transistor, there would be only dark current flowing through the output circuit. Now, if we increase the voltage across the LED, the LED starts glowing and at same time intensity of the light increases with increasing input voltage across the LED. This emitted light falls upon the base of the photo-transistor, causing it to switch- ON and conduct.

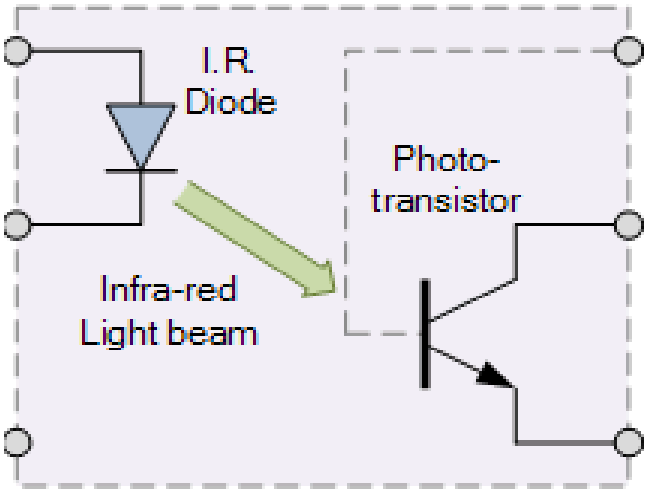

Figure Optocoupler

1.14 PLASMA

Plasma is referred to be the main element of a fluorescent light. It is actually a gas (Xeon or Neon) including ions and electrons. Under normal conditions, the gas has only uncharged particles. That is, the number of positive charged particles [protons] will be equal to the number of negative charged particles [electrons]. This gives the gas a balanced position. In plasma, photons of energy are released, if an electrical current is allowed to pass through it.

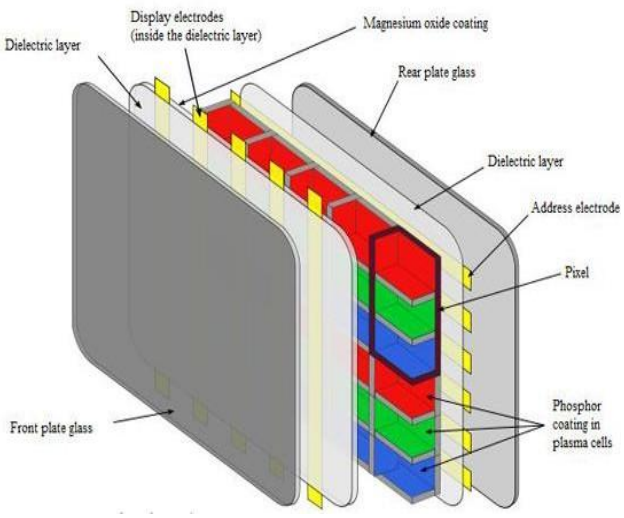

Figure Plasma display

Two plates of glass are taken between which millions of tiny cellscontaining gases like xenon and neon are filled. Electrodes are also placed inside the glass plates in such a way that they are positioned in front and behind each cell. The rear glass plate has with it the address electrodes in such a position that they sit behind the cells. The front glass plate has with it the transparent display electrodes, which are surrounded on all sides by a magnesium oxide layer and also a dielectric material. They are kept in front of the cell.As told earlier when a voltage is applied, the electrodes get charged and cause the ionization of the gas resulting in plasma. This also includes the collision between the ions and electrons resulting in the emission of photon light.

SATHYABAMA
INSTITUTE OF SCIENCE AND TECHNOLOGY
(DEEMED TO BE UNIVERSITY)
Accredited "A" Grade by NAAC | 12B Status by UGC | Approved by AICTE
www.sathyabama.ac.in

SCHOOL OF MECHANICAL ENGINEERING
DEPARTMENT OF MECHATRONICS ENGINEERING

UNIT - 2
Electronic Devices and Circuits-SECA1306

2.1 BIPOLAR JUNCTION TRANSISTOR

A bipolar junction transistor (BJT) consists of three differently doped regions. These can have the configuration of *npn* or *pnp* and the various layers can either be parallel or perpendicular to the surface. Consider a *pnp* BJT, with three differently doped regions.

- **Emitter region** - this is usually a heavily doped region (p^+). The emitter 'emits' the carriers into the base.
- **Base region** - this is a lightly doped *n* region. The base region is also physically thin so that carriers can pass through with minimal recombination.
- **Collector region** - this is a *p* type region. The collector region has a larger width that the other two regions since charge is accumulated here from the base. .

The symbols and nomenclature of the BJT transistor is shown in figure 2. Thus, a transistor consists of two *pn* junctions, each with its own depletion region.

- Emitter-base junction - since the emitter is usually heavily doped, the depletion region lies almost entirely in the base.
- Base-collector junction - the depletion region at this junction is usually divided between base and collector, since they are comparably doped.

There are three different configurations in which the BJT can function common base, common emitter, and common collector. The circuit connections are summarized in figure 3.

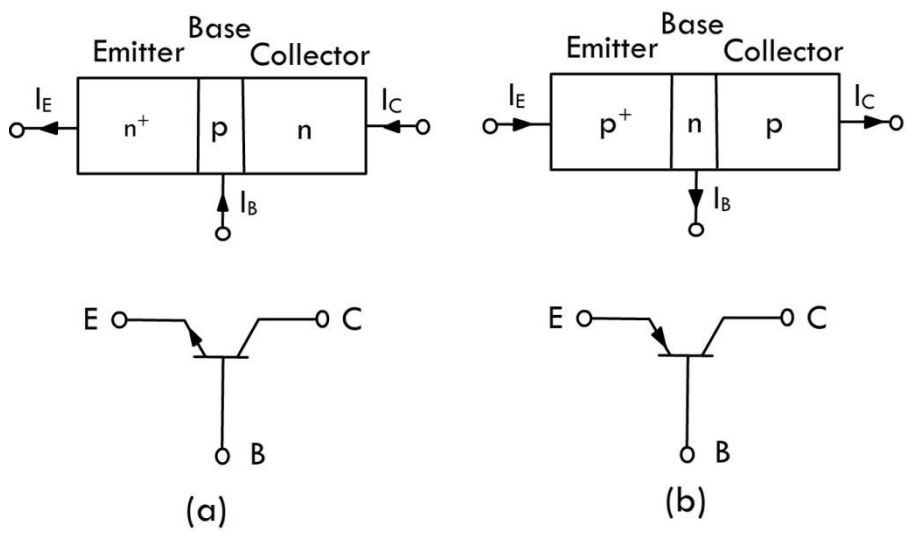

Figure 2: Symbols and nomenclature of a (a) *npn* and (b) *pnp* transistor.

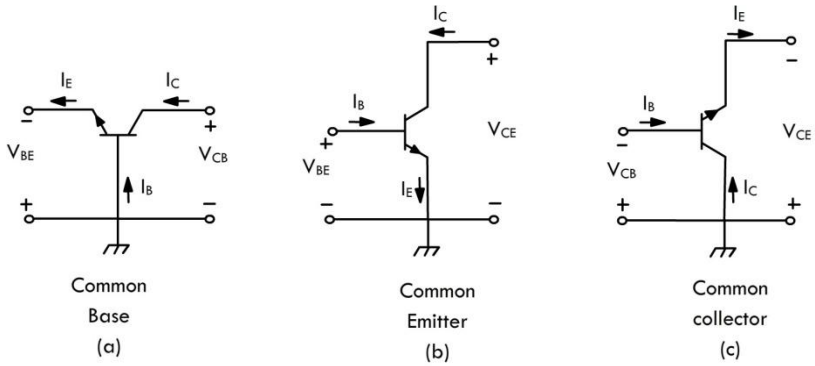

Figure 3: BJT transistor configurations - common (a) base, (b) emitter, and (c) collector configurations.

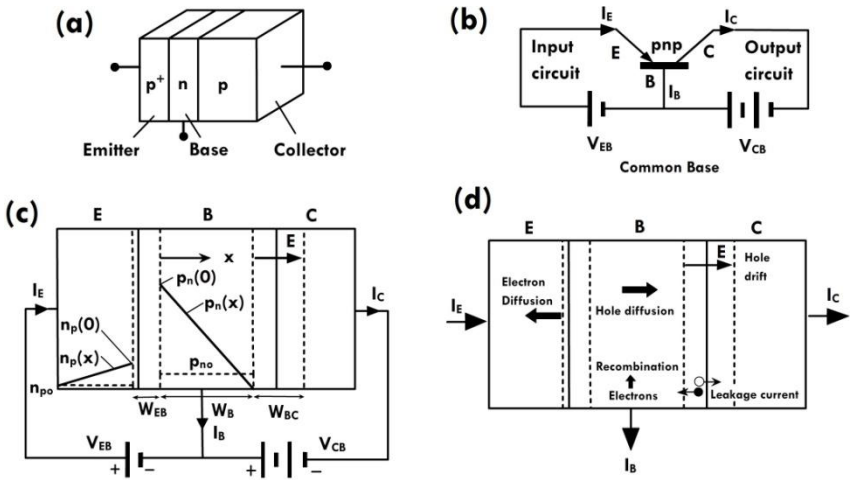

Figure 4: Summary of the common base BJT. (a) Schematic of the CB p^+np BJT (b) Circuit diagram showing the connections. (c) Schematic of the currents and concentration gradients. (d) The various diffusion and drift currents in the transistor.

COMMON BASE (CB) CONFIGURATION

In this configuration the base is held common between the emitter and col- lector. This arrangement is summarized in figure 4. Looking at the circuit configuration, the emitter base junction is forward biased while the collected base junction is reverse biased. In a *pnp* transistor holes, which are the ma- jority carriers in the emitter, are injected into the base. This constitutes the emitter current, I_E. These holes become minority carriers in the base, since it is doped *n* type. Some of these holes recombine with the electrons in the base. Hence, electrons are injected into the base to compensate for that and this forms the base current, I_B. The base collector junction is reverse biased so that the holes that do not recombine in the base are swept into the collec- tor and form the collector current, I_c. This current is due to hole drift since the flow is due to the applied electric field. The ratio of the

collector current to the emitter current is called the *current gain* or the *current transfer ratio* (α). Typical values of α are 0.99 - 0.999, i.e. only a small fraction is lost to recombination in the base. This is a consequence of the fact that the base region is physically thin and also lightly doped, so that the hole diffusion length is high. The total current in the circuit should be balanced, so that

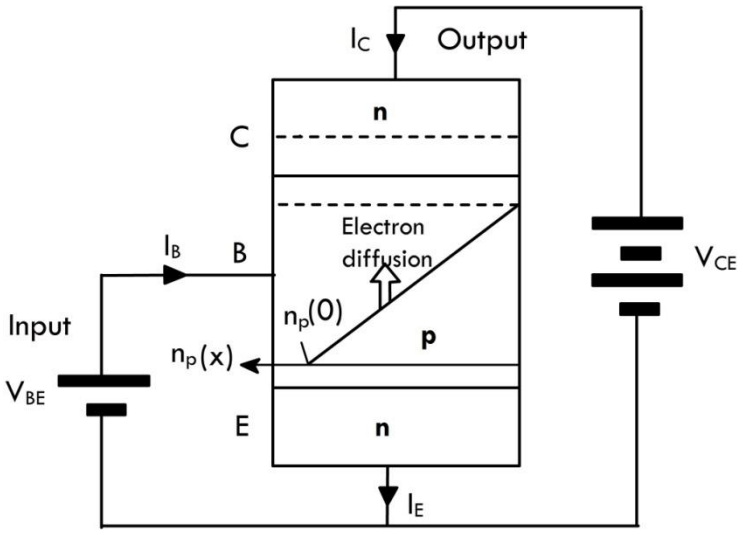

Figure 5: A common emitter configuration for the *npn* BJT.

$$I_E = I_C + I_B.$$

The transistor action arises in the CB configuration when the collector-base voltage (V_{CB}) is higher than the emitter-base voltage (V_{EB}). This leads to a net power gain in the device. A BJT is an example of a current controlled device since the current in the output circuit is controlled by the current and voltage in the input circuit.

COMMON EMITTER (CE) CONFIGURATION

The circuit diagram for the CE configuration is summarized in figure 5. In this configuration, the emitter-base junction is forward biased. The base current is the input current and the collector current is the output. Hence, the transistor acts as a amplifier since a small base current is amplified into a larger collector current. This amplification is given by the current transfer ratio (α). If a time varying signal is applied to the base the amplified signal at the collector has the same time variation.

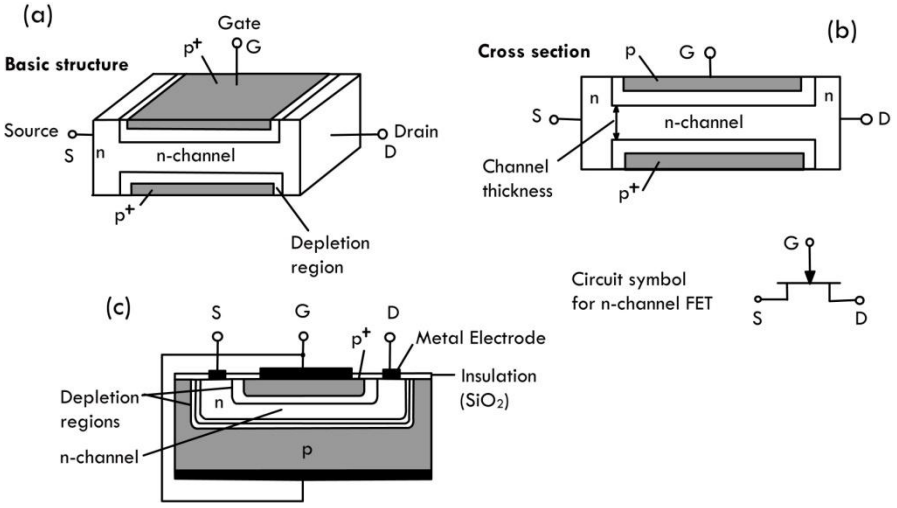

Figure 6: A junction field effect transistor (JFET). (a) Three dimensional representation of the JFET. (b) Cross section of the ideal JFET, showing the n-channel and the transistor symbol. (c) A practical implementation of the JFET.

2.2 JUNCTION FIELD EFFECT TRANSISTOR

In the BJT there are distinct emitter, base, and collector regions, forming 2 *pn* junctions. These regions exist even in the absence of an external bias, since they are created during the fabrication process. The device is current controlled, since carrier injection into the base and loss due to recombination decides the gain. In a field effect transistor (FET) current flow takes place through a channel in the device. The channel is either already fabricated in the device (junction FET) or is created by application of an external poten- tial (metal oxide FET) and disappears when the bias is removed. The reason for calling these *'field effect'* transistors is that the current flow depends on the width of the channel which is controlled by the external potential (elec- tric field). Thus FETs are *voltage controlled* devices.

The basic structure of the JFET is shown in figure 6. The schematic picture of the device provides a greater understanding of the role of the channel. A JFET consists of 3 regions where electrical connections are made i.e. the *source*, *drain*, and *gate*. The channel provides the pathway for carrier trans- port from the source to the drain, while the gate bias (sign and magnitude)

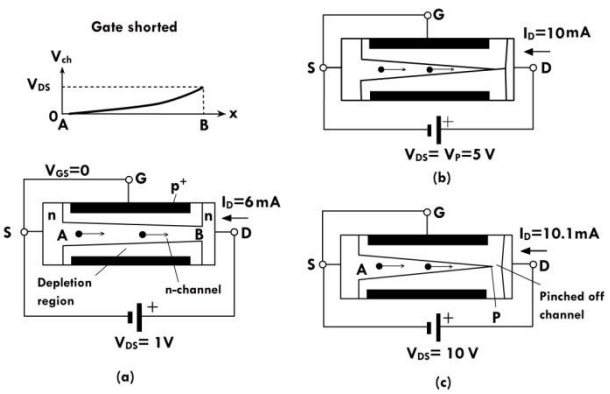

Figure 7: Carrier flow in a *n* channel with the gate shorted. (a) With low V_{DS} a current flows through the channel. (b) With increase in V_{DS} the channel pinches off near the drain, since the drain gate junction is reverse biased. (c) After pinch-off, there is no further increase in current, reaching a saturation.

Consider a simple system where the gate is shorted with respect to the source. So V_{GS} is zero and the drain is biased positively with respect to the source, so that $V_{DS} > 0$. For a *n* channel, this leads to electrons flowing from the source to the drain (biasing would be reversed for a *p* channel). The current flow in this scenario, with increasing V_{DS}, is summarized in figure 7. The *p* regions (source and drain) in the transistors are heavily doped so that the depletion region falls in the *n* side and the channel width is the region between the 2 depletion regions. In the bias condition shown in figure 7, the region between the source and the *p* is forward biased while the region between the drain and *p* is reverse biased. With increase in V_{DS} the current flow in the channel increases but at the same time the channel starts to narrow near the drain side. Ultimately, beyond a certain value of V_{DS}, the channel is *pinched off* near the drain end. Hence, there is no increase in current, for a small increase in voltage, since there is injection of electrons in the pinched off region and these get swept into the drain. This is shown in the I-V characteristics of the

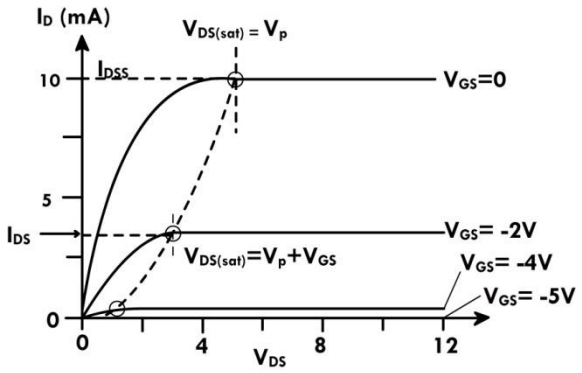

Figure 8: IV characteristics of the JFET for different V_{GS}. The current is highest when

the gate is shorted. Applying a negative bias at the gate reduces the width of the channel and reduces the channel conductivity.

JFET (with V_{GS} zero) in figure 8. The current initially increases with V_{GS} and then gets saturated after a certain voltage when pinch off occurs.In a JFET device with the gate shorted, the channel width is determined by the dopant concentrations which also determines the voltage where pinch-off occurs. But by applying a potential to the gate it is possible to change the width of the channel. This is responsible for the transistor action, since the current across the two terminals (source and drain) is controlled by the volt- age across two other terminals (source and gate). In a *n* channel JFET if $V_{GS} > 0$ then the channel width will slightly increase but device modulation is not achieved (current control does not happen). On the other hand, if the gate is biased negatively with respect to the source, $V_{GS} < 0$, the channel width is reduced so that pinch off occurs earlier and the voltage where pinch- off occurs is determined the magnitude of V_{GS}. The channel behavior for a negatively biased gate is summarized in figure 9.Thus, with increasing value of V_{GS} (negatively biased), the V_{DS} at which pinch-off occurs comes earlier and also the current through the channel de- creases. This is reflected in the I-V characteristics plot, shown in figure 8. With increasingly negative V_{GS}, the channel current decreases. There is also a critical value of V_{GS} where the pinch off occurs before the device is in oper-

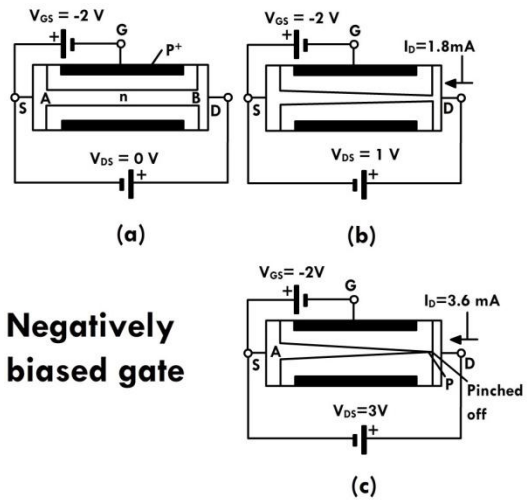

Figure 9: Carrier flow in a *n* channel with the gate negatively biased with respect to the source. (a) No V_{DS}, channel is narrower than a shorted gate (b) With positive V_{DS}, current flows occurs with channel narrowing near the drain. (c) Pinch-off happens at high V_{DS}.

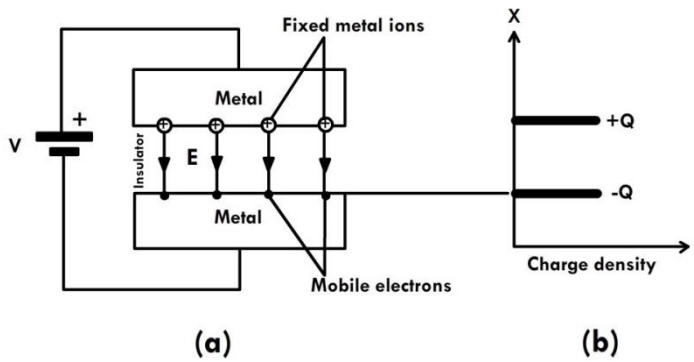

Figure 12: Parallel plate capacitors with two metals, separated by an insu- lator. (a) One metal plate has a net positive charge on the surface and the other has a net negative charge. (b) The excess charges reside on the surface and do not penetrate in the bulk

positive terminal and the *p* type semiconductor is connected to the negative terminal. So a net positive charge resides on the metal surface. To maintain charge neutrality, a net negative charge must reside on the semiconductor. But the charge density in a semiconductor is much smaller than a metal (typ- ically 10^{16} to 10^{18} cm^{-3}), so that in the semiconductor the charge not only resides on the semiconductor but also penetrates to a certain depth within the bulk, as shown in figure 13(a). Given that it is a *p* type semiconductor and the excess charges are electrons there is thus a *lowering* of the hole con- centration at a region near the surface. This is called a **depletion region**. With increase in applied voltage, the positive charge on the metal increases and the width of the depletion region in the semiconductor increases. Cor- respondingly, the electron concentration on the surface of the semiconductor increases. There is a certain voltage, called **threshold voltage**, V_{th}, above which there forms a region near the semiconductor surface where the elec- tron concentration is higher than the hole concentration. This is called the **inversion region**. A *n channel* is then created near the surface of a *p* type semiconductor by the application of external potential. The formation of the inversion region, is shown in figure 13(b). In the inversion region, $n > p$, while in the depletion region, $p > n$ but pN_A. The basic structure of the MOSFET is shown in figure 14. The figure shows a *npn* MOSFET with three electrical connections, source, drain and gate,

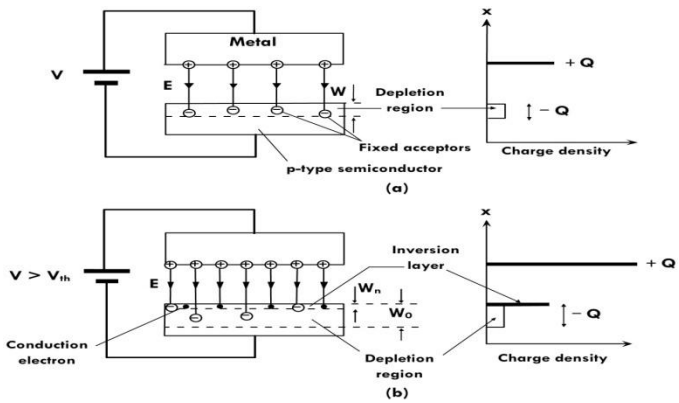

Figure 13: Metal insulator semiconductor setup. Because of the difference in charge density between the metal and semiconductor, charges penetrate into the bulk of the semiconductor creating (a) Depletion region (b) Inversion and depletion at higher voltages.

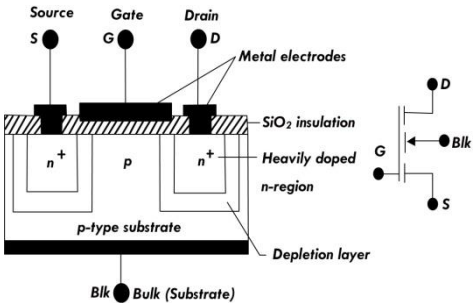

Figure 14: MOSFET basic structure with device symbol. There is a source, gate, and drain. The source and drain are connected to heavily doped n^+ regions. The gate is separated from the *p* semiconductor by an insulator and is used to form the *n*-channel.

similar to a JFET. This structure is called an *enhancement MOSFET*. The bulk of the semiconductor is *p* type with two heavily doped n^+ regions near the source and drain. Thus, two pn^+ junctions are formed, with the depletion region lying mostly in the *p* side. The gate is usually made of metal or more recently, heavily doped poly-Si (with high electrical conductivity) and it is separated from the semiconductor by an insulator. The most common insu- lator is SiO_2, which is the reason for the name *metal-oxide-semiconductor*, though high *k* dielectrics based on Hafnium, have replaced the simple sili- con oxide. Electrical connections are made to the source, drain, and gate at different biases similar to the JFET.

MOSFET I-V characteristics

The I-V characteristics of the MOSFET is summarized in figure 15. In a *npn* MOSFET, the gate is biased positive with respect to the source ($V_{GS} > 0$). This reverse bias causes electrons to accumulate at the the *p*-type semicon- ductor oxide interface. Below the threshold voltage for inversion (V_{th}),there is no *n*-channel created and any current is due to thermally generated carriers and is negligible. When the gate voltage exceeds V_{th}, an *n*-channel is created. With the drain is biased positive with respect to the source ($V_{DS} > 0$).

2.4 SILICON CONTROLLED RECTIFIER (SCR)

A silicon controlled rectifier is a semiconductor device that acts as a true electronic switch. It can change alternating current into direct current and at the same time can control the amount of power fed to the load. Thus *SCR* combines the features of a rectifier and a transistor.

Constructional Details

When a PN junction is added to a junction transistor, the resulting three pn junction device is called a silicon controlled rectifier. Fig. I shows its construction. It is clear that it is essentially an ordinary rectifier (pn) and a junction transistor (npn) combined in one unit to form pnpn device. Three terminals are taken; one from the outer p-type material called anode A, second from the outer n-type material called cathode K and the third from the base of transistor section and is called gate G. In the normal operating conditions of SCR, anode is held at high positive potential w.r.t. cathode and gate at small positive potential w.r.t. cathode. Fig. (ii) shows the symbol of SCR.The silicon controlled rectifier is a solid state equivalent of thyratron. The gate, anode and cathode of SCR correspond to the grid,

plate and cathode of thyratron. For this reason, SCR is sometimes called thyristor.

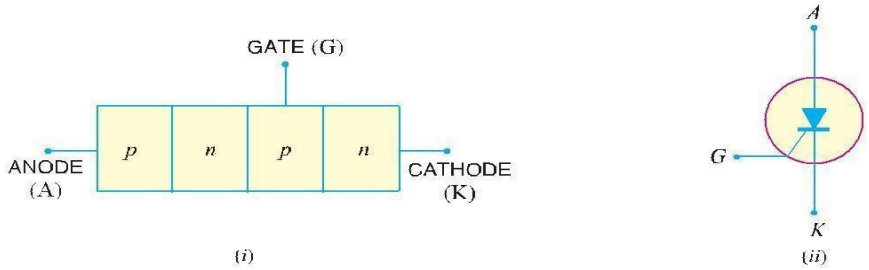

Working of SCR

In a silicon controlled rectifier, load is connected in series with anode. The anode is always kept at positive potential *w.r.t.* cathode. The working of *SCR* can be studied under the following two heads:

When Gate is Open

Fig.2 shows the SCR circuit with gate opens i.e. no voltage applied to the gate. Under this condition, junction J2 is reverse biased while junctions J1 and J3 are forward biased. Hence, the situation in the junctions J1 and J3 is just as in a npn transistor with base open. Consequently, no current flows through the load RL and the SCR is cut off. However, if the applied voltage is gradually increased, a stage is reached when reverse biased junction J2 breaks down. The SCR now conducts heavily and is said to be in the ON state. The applied voltage at which SCR conducts heavily without gate voltage is called Breakover voltage.

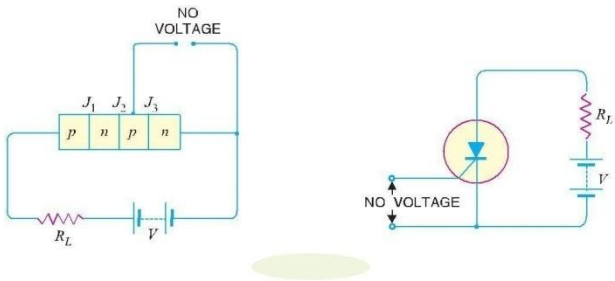

When Gate is Positive W.R.T. Cathode

The SCR can be made to conduct heavily at smaller applied voltage by applying a small positive potential to the gate as shown in Fig. 20.3. Now junction J3 is forward biased and junction J2 is reverse biased. The electrons from n-type material start mov- ing across junction J3 towards left whereas holes from p-type towards the right. Consequently, the electrons from junction J3 are attracted across junction J2 and gate current starts flowing. As soon as the gate current flows, anode current increases. The increased anode current in turn makes more electrons available at junction J2. This process continues and in an extremely small time, junction J2 breaks down and the SCR starts conducting heavily. Once SCR starts conducting, the gate (the reason for this name is obvious) loses all control. Even if gate voltage is removed, the anode current does not decrease at all. The only way to

stop conduction (i.e. bring SCR in off condition) is to reduce the applied voltage to zero.

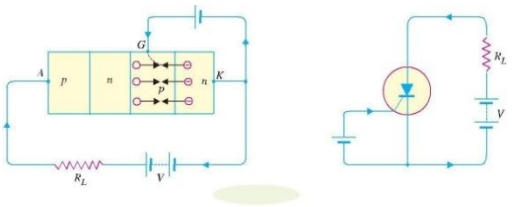

The whole applied voltage V appears as reverse bias across junction J2 as junctions J1 and J3 are forward biased. Because J1 and J3 are forward biased and J2 has broken down. The V-I characteristics of the SCR reveal that the SCR can be operated in three modes There are three modes of operation for an SCR depending upon the biasing given to it:

- Forward blocking mode (off state)
- Forward conduction mode (on state)
- Reverse blocking mode (off state)

Forward Blocking Mode

In this mode of operation, the anode is given a positive potential while the cathode is given a negative voltage, keeping the gate at zero potential i.e. disconnected. In this case junction J1 and J3 are forward biased while J2 is reversed biased due to which only a small leakage current exists from the anode to the cathode

until the applied voltage reaches its breakover value, at which J2 undergoes avalanche breakdown and at this breakover voltage it starts conducting, but below breakover voltage it offers very high resistance to the current and is said to be in the off state.

Forward Conduction Mode

SCR can be brought from blocking mode to conduction mode in two ways: either by increasing the voltage across anode to cathode beyond breakover voltage or by applying of positive pulse at gate. Once it starts conducting, no more gate voltage is required to maintain it in the on state. There are two ways to turn it off: 1. Reduce the current through it below a minimum value called the holding current and 2. With the Gate turned off, short out the Anode and Cathode momentarily with a push-button switch or transistor across the junction.

Reverse Blocking Mode

In this mode SCR is reversed biased , ie when anode is negative compared to cathode. the characteristic of this region are similar to those of an ordinary PN junction diode. in this region ,junctionJ1and J3 are reversed biased whereas j2 is farward biased .the device behaves as if two diodes are connected in series with a reverse voltage applied to them.a small leakage current of the order of milliamperes or micro amperes flow in the device. this reverse blocking mode is called the OFF state of the thyristor .when the reverse voltage of the SCR increases to a large extent breakdown occurs and the current in the device increases rapidly. Thus when the SCR is biased in this region the

power dissipated is very high, if the power dissipated is more than the rated value of the SCR , the SCR is permanently damaged .thus in the reverse bias condition the voltahe should never cross the breakdown voltage

Characteristics Of SCR

It is the curve between anode-cathode voltage (V) and anode current (I)of an SCR at constant gate current. Fig. 4 shows the V-I characteristics of a typical SCR.

Forward Characteristics

When anode is positive w.r.t. cathode, the curve between V and I is called the forward characteristic. In Fig. 4, OABC is the forward characteristic of SCR at IG = 0.If the supply voltage is increased from zero, a point is reached (point A) when the SCR starts conducting. Under this condition, the voltage across SCR suddenly drops as shown by dotted curve AB and most of supply voltage appears across the load resistance RL. If proper gate current is made to flow,SCR can close at much smaller supply voltage.

Reverse Characteristics

When anode is negative w.r.t. cathode, the curve between V and I is known as reverse characteristic. The reverse voltage does come across SCR when it is operated witha.c. supply. If the reverse voltage is gradually increased, at first the anode current remains small (i.e.leakage current) and at some reverse voltage, avalanche breakdown occurs

and the SCR starts conducting heavily in the reverse direction as shown by the curve DE. This maximum reverse voltage at which SCR starts conducting heavily is known as reverse breakdown voltage.

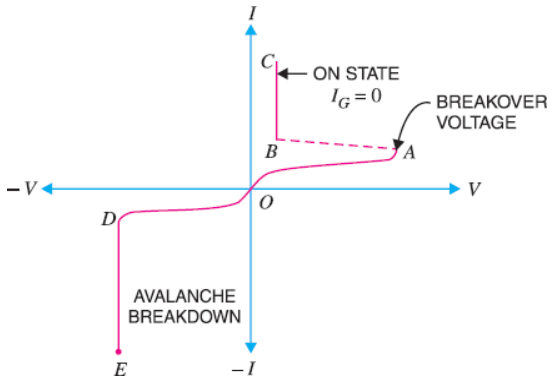

FIG:4 VI CHARACTERISTIC OF SCR

Equivalent Circuit of SCR

The *SCR* shown in Fig. 20.4 (*i*) can be visualised as separated into two transistors as shown in

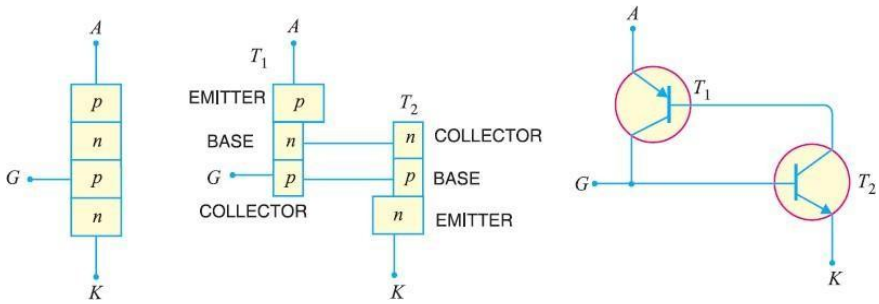

Fig. 5. Thus, the equivalent circuit of *SCR* is composed of *pnp* transistor and *npn* transistorconnected as shown in Fig.5. It is clear that collector of each transistor is coupled to the baseof the other, thereby making a positive feedback loop.

The working of *SCR* can be easily explained from its equivalent circuit. Fig. 6 shows the equivalent circuit of *SCR* with supply voltage *V* and load resistance *RL*. Assume the supply voltage *V* is less than break over voltage as is usually the case.

With gate open (*i.e.* switch *S* open), there is no base current in transistor *T*2. Therefore, no current flows inthe collector of *T*2 and hence that of *T*1. Under such conditions, the *SCR* is open. However, if switch *S* is closed, a small gate current will flow through the base of *T*2 which means its collector current will increase.

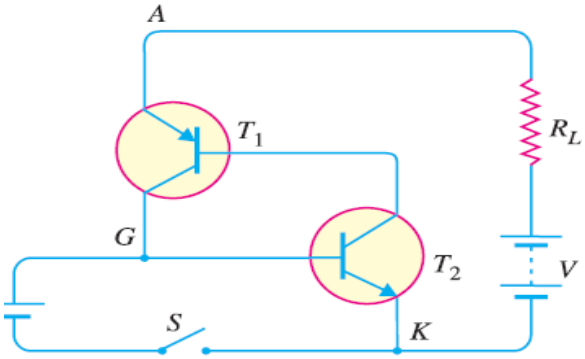

The collector current of *T*2 is the base current of *T*1.Therefore, collector current of *T*1 increases. But collector current of *T*1 is the base current of *T*2. This action is accumulative since an increase of current in one transistor causes an increase of current in the other transistor. As a result of this action, both transistors are driven to saturation, and heavy current flows through the load *RL*. Under such conditions, the *SCR* closes.

Applications

Silicon controleld rectifiers, SCRs are used in many areas of electronics where they find uses in a variety of different applications. Some of the more common applications for them are outlined below:

- AC power control (including lights, motors,etc).
- Overvoltage protection crowbar for power supplies.
- AC power switching.
- Control elements in phase angle triggered controllers.
- Within photographic flash lights where they act as the switch to discharge a stored

voltage through the flash lamp, and then cut it off at the required time. Thyristors are able to switch high voltages and withstand reverse voltages making them ideal for switching applications, especially within AC scenarios.

2.5 TRIAC

The major drawback of an SCR is that it can conduct current in one direction only. Therefore, an SCR can only control d.c. power or forward biased half-cycles of a.c. in a load. However, in an a.c. system, it is often desirable and necessary to exercise control over both positive and negative halfcycles. For this purpose, a semiconductor device called triac is used

A triac is a three-terminal semiconductor switching device which can control alternating current in a load. Triac is an abbreviation for triode a.c. switch. 'Tri'– indicates that the device has three terminals and 'ac' means that the device controls alternating current or can conduct current in either direction.

The key function of a triac may be understood by referring to the simplified Fig.7(i) . The control circuit of triac can be adjusted to pass the desired portions of positive and negative half cycle of a.c. supply through the load RL. Thus referring to Fig. 7 (ii), the triac passes the positive half-cycle of the supply from θ1 to 180° i.e. the shaded portion of positive half-cycle. Similarly, the shaded portion of negative half-cycle will pass through the load. In this way, the alternating current and hence a.c. power flowing through the load can be controlled

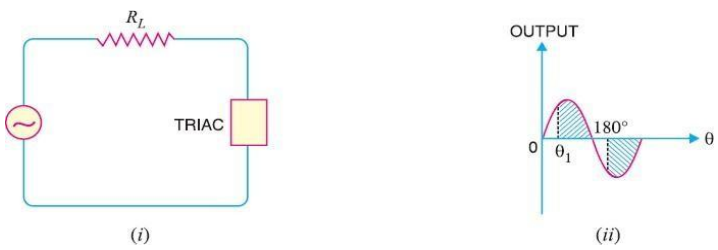

Since a triac can control conduction of both positive and negative half-cycles of a.c. supply, it is sometimes called a bidirectional semi-conductor triode switch. The above action of a triac is certainly not a rectifying action (as in an *SCR) so that the triac makes no mention of rectification in its name

TRIAC CONSTRUCTION

A triac is a three-terminal, five-layer semiconductor device whose forward and reverse characteristics are indentical to the forward characteristics of the SCR. The three terminals are designated as main terminal MT1, main terminal MT2 and gate G.

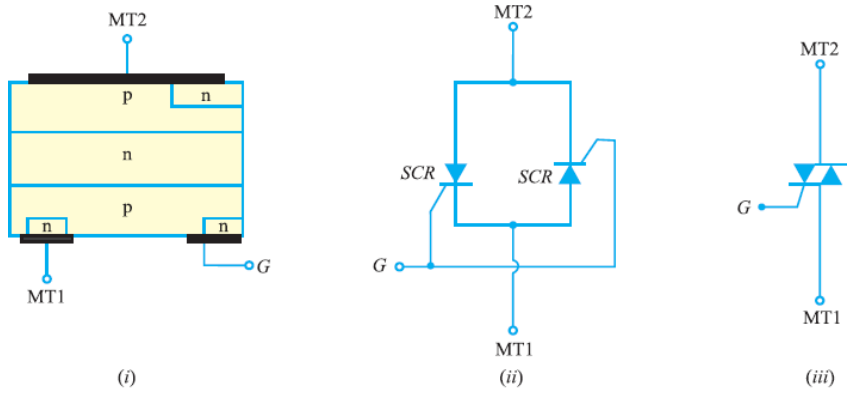

Fig. 8 (i) shows the basic structure of a triac. A triac is equivalent to two separate SCRs connected in inverse parallel (i.e. anode of each connected to the cathode of the other) with gates commoned as shown in Fig. 8 (ii).

Therefore, a triac acts like a bidirectional switch i.e. it can conduct current in either direction. This is unlike an SCR which can conduct current only in one direction. Fig. 8 (iii) shows the schematic symbol of a triac.

The symbol consists of two parallel diodes connected in opposite directions with a single gate lead. It can be seen that even the symbol of triac indicates that it can conduct current for either polarity of the main terminals (MT1 and MT2) i.e. it can act as a bidirectional switch. The gate provides control over conduction in either direction

Then a triac has four possible triggering modes of operation as follows.

- I + Mode = MT2 current positive (+ve), Gate current positive (+ve)
- I – Mode = MT2 current positive (+ve), Gate current negative (-ve)
- III + Mode = MT2 current negative (-ve), Gate current positive (+ve)
- III – Mode = MT2 current negative (-ve), Gate current negative (-ve)

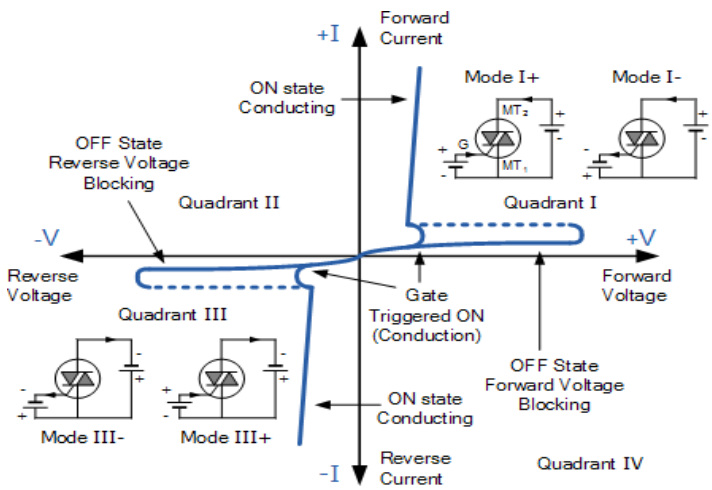

Fig 9 VI Characteristics of TRIAC

In Quadrant I, the triac is usually triggered into conduction by a positive gate current, labelled above as mode I+. But it can also be triggered by a negative gate current, mode I–. Similarly, in Quadrant III, triggering with a negative gate current, –IG is also common, mode III– along with mode III+. Modes I– and III+ are, however, less sensitive configurations requiring a greater gate current to cause triggering than the more common triac triggering modes of I+ and III–.

TRIAC Operation

Since a Triac is a bidirectional device and can have its terminals at various combinations of positive and negative voltages, there are four possible electrode potential combinations as given below

The triggering sensitivity is highest with the combinations 1 and 3 and are generally used. However, for bidirectional control and uniforms gate trigger mode sometimes trigger modes 2 and 3 are used. Trigger mode 4 is usually averted. Fig 10 (a) and (b) explain the conduction mechanism of a triac in trigger modes 1 & 3 respectively.

In trigger mode-1 the gate current flows mainly through the P N junction like an ordinary thyristor. When the gate current has injected sufficient charge into P layer the triac starts conducting through the P N P N layers like an ordinary thyristor.

In trigger mode-2 the junction P2-N3 is forward biased, thus the electron is injected from N3 into P2. a current that flows in P2owards the N3 gate and thus P1N1P2N3 turns on as the gain of N3P2N1 transistor raises. this supplies current to N2 thus P1N1P2N2 conducts.

In trigger mode- 3t he gate current I forward biases the P P junction and a large number of electrons are introduced in the P region by N . Finally the structure P N P N turns on completely.

In trigger mode-4 junction P2N3 is forward biased and the electron are injected from N3 TO P2 .the potential in N1 decreases and holes are injected from p2 to n1 this turns on the SCR P2N1P1N4

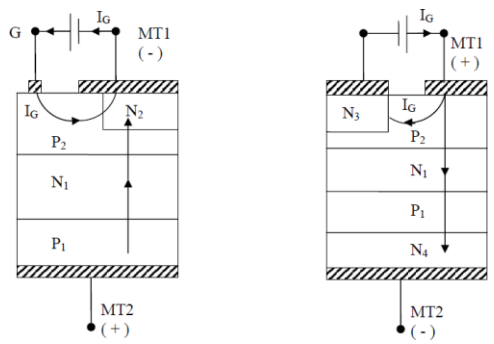

Applications

The TRIAC as a bidirectional thyristor has various applications. Some of the popular applications of the

(i) In speed control of single-phase ac series or universal motors.

(ii) In food mixers and portable drills.

(iii) In lamp dimming and heating control.

(iv) In zero-voltage switched ac relay

(v) Triacs are extensively used at power frequency ac load (eg heater, light, motors) control applications.

2.6 DIAC (DIODE FOR ALTERNATING CURRENT)

A diac is a two-terminal, three layer bidirectional device which can be switched from its OFF state to ON state for either polarity of applied voltage the diac can be constructed in either npn or pnp form. the DIAC is a diode that conducts electrical current only after its breakover voltage, VBO,

The DIAC is a five layers and contains two terminal, anode A1 (or main terminal MT1) and anode A2 (or main terminal MT2) like a TRIAC just without a gate terminal.

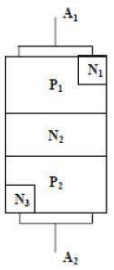

Construction of DIAC

Symbol of DIAC

Fig. 11 shows the basic structure of a diac in pnp form. The two leads are connected to p-regions of silicon separated by an n-region. The structure of diac is very much similar to that of a transistor.

However, there are several imporant differences:

(i)There is no terminal attached to the base layer.

(ii) The three regions are nearly identical in size.

(iii) The doping concentrations are identical (unlike a bipolar transistor) to give the device symmetrical properties. Fig. 11(ii) shows the symbol of a diac

OPERATION.

When a positive or negative voltage is applied across the terminals of a diac, only a small leakage current IBO will flow through the device. As the applied voltage is increased, the leakage current will continue to flow until the voltage reaches the breakover voltage VBO. At this point, avalanche breakdown of the reverse-biased junction occurs and the device exhibits negative resistance i.e. current through the device increases with the decreasing values of applied voltage. The voltage across the device then drops to 'breakback' voltage VW.

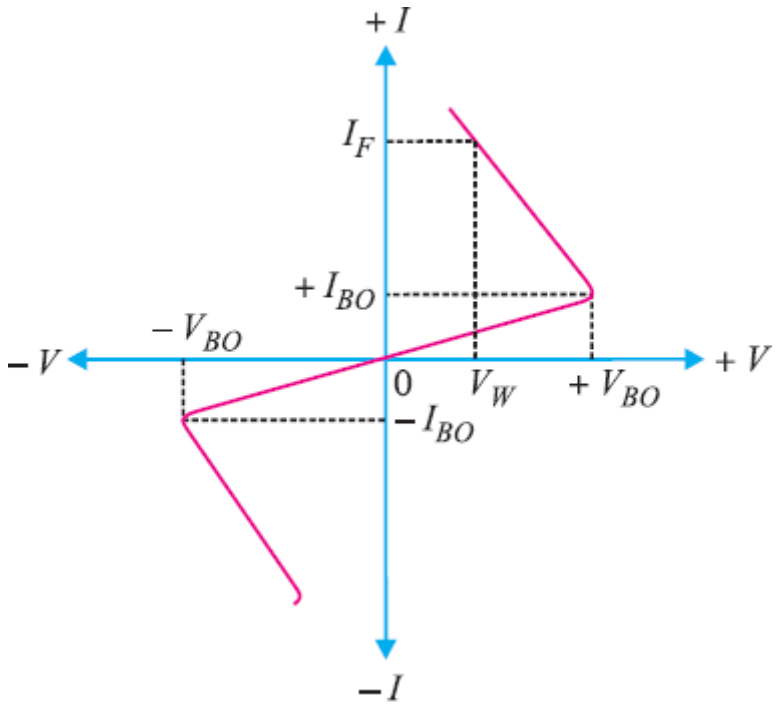

Fig. 12 shows the V-I characteristics of a diac. For applied positive voltage less than + VBO and negative voltage less than − VBO, a small leakage current (± IBO) flows through the device. Under such conditions, the diac blocks the flow of current and effectively behaves as an open circuit. The voltages + VBO and − VBO are the breakdown voltages and usually have a range of 30 to 50 volts. When the positive or negative applied voltage is equal to or greater than the breakdown voltage, diac begins to conduct and the voltage drop across it becomes a few volts. Conduction then continues until the device current drops below its holding current. Note that the breakover voltage and holding current values are identical for the forward and reverse regions of operation.

Diacs are used primarily for triggering of triacs in adjustable phase control of a.c. mains power. Some of the circuit applications of diac are

(i) light dimming

(ii) (ii) heat control and

(iii) (iii) universal motor speed control.

2.7 UNI JUNCTION TRANSISTOR (UJT)

A unijunction transistor (abbreviated as UJT) is a three-terminal semiconductor switching device. This device has a unique characteristic that when it is triggered, the emitter current increases regeneratively until it is limited by emitter power supply. Due to this characteristic, the unijunction transistor can be employed in a variety of applications e.g., switching, pulse generator, saw-tooth generator etc

CONSTRUCTION.

Fig. 13 (i) shows the basic *structure of a unijunction transistor. It consists of an n-type silicon bar with an electrical connection on each end. The leads to these connections arecalled base leads base-one B1 and base two B2. Part way along the bar between the two bases, nearer to B2 than B1, a pn junction is formed between a p- type emitter and the bar. The lead to this junction is called the emitter lead E.

Fig. 13 (ii) shows the symbol of unijunction transistor. Note that emitter is shown closer to B2 than B1.

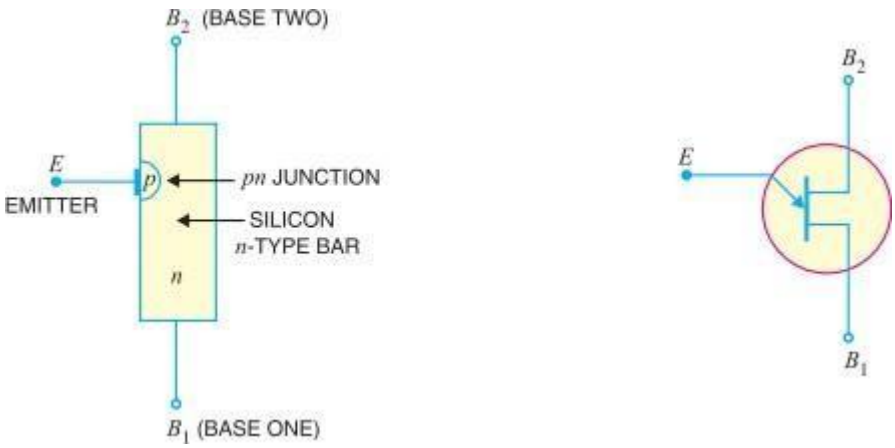

(i) Since the device has one pn junction and three leads, it is commonly called a unijunction transistor (uni means single).

(ii) With only one pn-junction, the device is really a form of diode. Because the two base terminals are taken from one section of the diode, this device is also called double- based diode.

(iii) The emitter is heavily doped having many holes. The n region, however, is lightly doped. For this reason, the resistance between the base terminals is very high (5 to 10 kΩ) when emitter lead is open.

OPERATION.

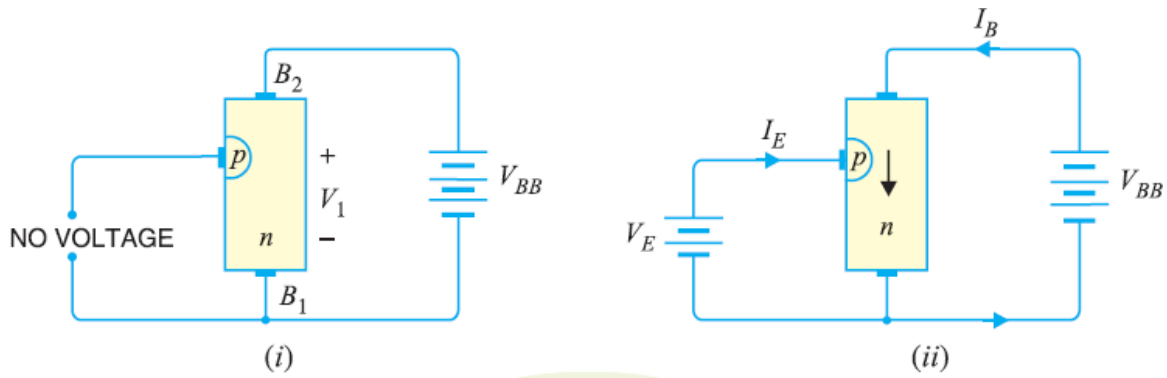

Fig. 14 shows the basic circuit operation of a unijunction transistor.
The device has normally B2 positive w.r.t. B1.

(i) If voltage VBB is applied between B2 and B1 with emitter open [See Fig. 14 (i)], a voltage gradient is established along the n-type bar. Since the emitter is located nearer to B2, more than **half of VBB appears between the emitter and B1. The voltage V1 between emitter and B1 establishes a everse bias on the pn junction and the emitter current is cut off. Of course, a small leakage current flows from B2 to emitter due to minority carriers.

(ii) If a positive voltage is applied at the emitter [See Fig. 14 (ii)], the pn junction will remain reverse biased so long as the input voltage is less than V1. If the input voltage to the emitter exceeds V1, the pn junction becomes *forward biased. Under these conditions, holes are injected from p-type material into the n-type bar. These holes are repelled by positive B2 terminal and they are attracted towards B1 terminal of the bar. This accumulation of holes in the emitter to B1 region results in the decrease of resistance in this section of the bar. The result is that internal voltage drop from emitter to B1 is decreased and hence the emitter current IE increases. As more holes are injected, a condition of saturation will eventually be reached. At this point, the emitter current is limited by emitter power supply only. The device is now in the ON state.

(iii) If a negative pulse is applied to the emitter, the pn junction is reverse biased and the emitter current is cut off. The device is then said to be in the OFF state.

CHARACTERISTICS OF UJT

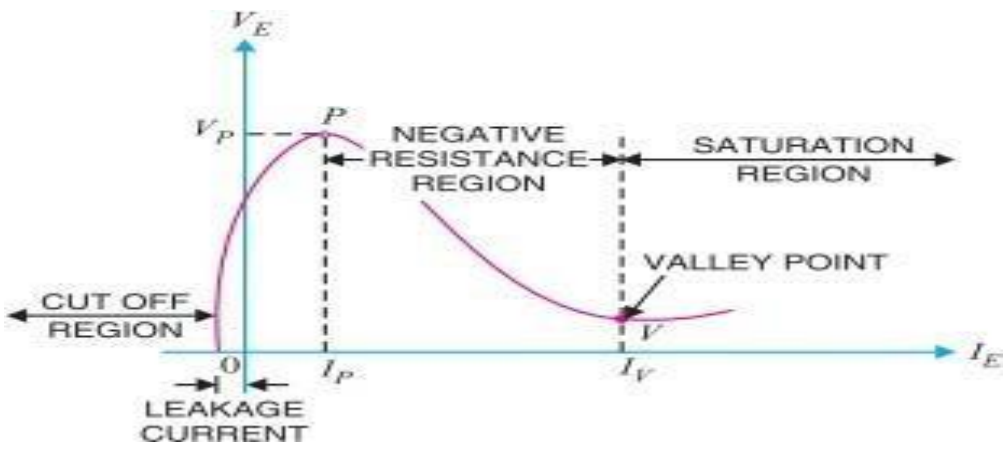

Fig. 15 shows the curve between emitter voltage (VE) and emitter current (IE) of a UJT at a given voltage VBB between the bases. This is known as the emitter characteristic of UJT. The following points may be noted from the characteristics :

(I)Initially, in the cut-off region, as VE increases from zero, slight leakage current flows from terminal B2 to the emitter. This current is due to the minority carriers in the reverse biased diode.

(ii) Above a certain value of VE, forward IE begins to flow, increasing until the peak voltage VP and current IP are reached at point P.

(iii) After the peak point P, an attempt to increase VE is followed by a sudden increase in emitter current IE with a corresponding decrease in VE. This is a negative resistance portion of the curve because with increase in IE, VE decreases. The device, therefore, has a negative resistance region which is stable enough to be used with a great deal of reliability in many areas e.g., trigger circuits, sawtooth generators, timing circuits

ADVANTAGES OF UJT

The UJT was introduced in 1948 but did not become commercially available until 1952. Since then, the device has achieved great popularity due to the following reasons :

(i) It is a low cost device.

(ii) It has excellent characteristics.

(iii) It is a low-power absorbing device under normal operating conditions.

APPLICATIONS OF UJT

Due to above reasons, this device is being used in a variety of applications. A few include oscillators, trigger circuits, saw-tooth generators, bistable network etc.

The UJT is very popular today mainly due to its high switching speed.

A few select applications of the UJT are as follows:

(i) It is used to trigger SCRs and TRIACs

(ii) It is used in non-sinusoidal oscillators

(iii) It is used in phase control and timing circuits

(iv) It is used in saw tooth generators

(v) It is used in oscillator circuit design

2.8 SCHOTTY BARRIER DIODE

A Schottky barrier diode is a metal semiconductor junction formed by bringing metal in contact with a moderately doped n type semiconductor material. A Schottky barrier diode is also called as known as Schottky or hot carrier diode. It is named after its inventor Walter H. Schottky, barrier stands for the potential energy barrier for electrons at the junction. It is a unilateral device conducting currents in one direction (Conventional current flow from metal to semiconductor) and restricting in the other.

- The charge storage problem of P-N junction can be minimize or limited in schottky diodes.
- The potential barrier is set with a contact between a metal & semiconductor.
- The rectifying action is depends on majority carrier only.
- As the result there are is o excess minority carrier to recombination hence low level of reverse recovery time.
- These diodes are used as rectifier at a single frequency exceeding 300 MHz to 20 GHz.

CONSTRUCTION SCHOTTKY BARRIER DIODE:

A metal–semiconductor junction is formed between a metal and a semiconductor, creating a Schottky barrier (instead of a semiconductor–semiconductor junction as in conventional diodes).Typical metals used are molybdenum, platinum, chromium or tungsten,and certain silicides, e.g. palladium silicide and platinum silicide; andthe semiconductor would typically be n-type silicon.

The metal side acts as the anode and n-type semiconductor acts as the cathode of the diode. This Schottky barrier results in both very fast switching and low forward voltage drop.

The choice of the combination of the metal and semiconductor determines the forward voltage of the diode. Both n- and p-type semiconductors can develop Schottky barriers; the p-type typically has a much lower forward voltage.

As the reverse leakage current increases dramatically with lowering the forward voltage, it

can not be too low; the usually employed range is about 0.5–0.7 V and p-type semiconductors are employed only rarely.

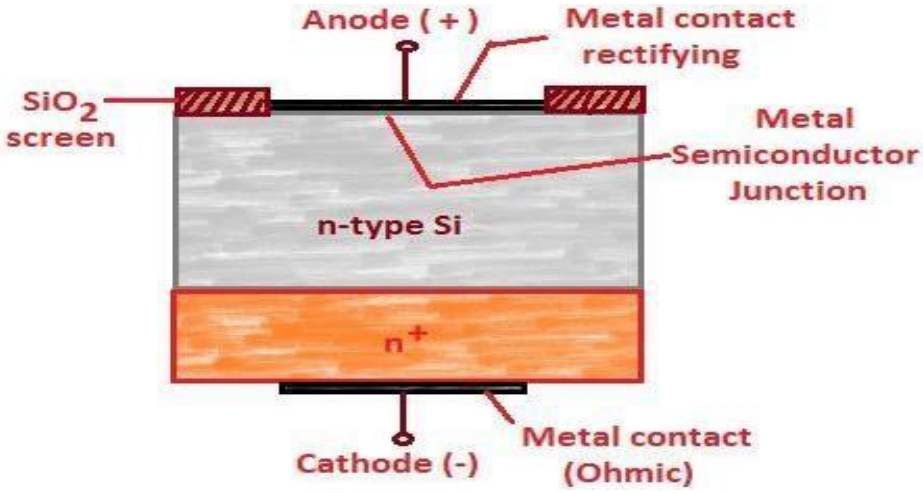

Schottky barrier diode is an extension of the oldest semiconductor device that is the point contact diode.Here,the metal-semiconductor interface is a surface ,Schottky barrier rather than a point contact.The Schottky doide is formed when a metal ,such as Aluminium ,is brought into contact with a moderately doped N-type semiconductor as shown on fig..It is a unipolar device because it has electrons as majority carriers on both sides of the junction.Hence ,there is no depletion layer formed near the junction.It shares the advantage of point contact diode in that there is no significant current from the metal to the semiconductor with reverse bias.Thus ,the delay present in the junction diodes due to hole-electron recombination time is absent here.hence,because of the large contact area between the metal and semiconductor than in the point contact diode,the forward resistance is lower and so is noise.

Below certain width the charge carriers can tunnel through the depletion region. At very high doping levels the junction does not behave as a rectifier anymore and becomes an ohmic contact. This can be used for simultaneous formation of ohmic.

The forward current is dominated by electron flow from semiconductor to metal and the reverse is mainly due to electron from metal to semiconductor. As there is very little minority carrier injection from semiconductor into metal, Schottky diodes are also said to be majority carrier devices. The diode is also referred to as hot carrier diode because when it is forward biased,conduction of electrons on the N-side gains sufficient energy to cross the junction and enter the metal. Since these electrons plunge into the metal with large energy, they are commonly called as hot carriers.

- Operation is due to the fact that the electrons in different material have different potential energy.

- N type semiconductors have higher potential energy as compare to electrons of metals.

- When these two are brought together in contact, there a flow of electron in both direction across the metal-semiconductor interface when contact is first made.

- A voltage is applied to the schottky diode such that the metal is positive with respect to semiconductor.

- The voltage will oppose the built in potential and makes it easier to current flow.

CHARACTERISTICS OF SCHOTTKY DIODE

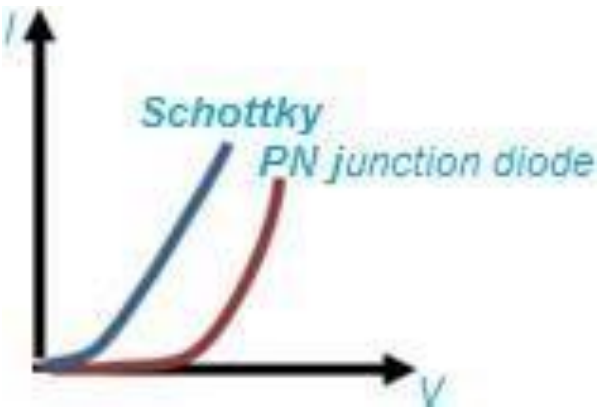

Above figure shows the V-I characteristics of a Schottky and a PN junction diode. The current in a PN junction diode is controlled by the diffusion of minority carriers whereas the current in the schottky diode results from the flow of majority carriers over the potential barrier at the metal-semiconductor junction.The reverse saturation current for a Schottky diode is larger than that of a PN junction diode.The storage time for a Schottky diode is theoretically zero.The schottky diode has a smaller turn-on voltage and shorter switching time than the PN junction diode.

ADVANTAGES :

- Schottky diode turns on and off faster than ordinary P-N junction diode the basic reason behind this is that schottky diodes are based on majority carrier.

- As there is no minority carrier there is no worry about depletion layer. It has much less voltage overshoot

APPLICATIONS SCHOTTKY BARRIER DIODE:

- Schottky diode can be used for rectification of signals of frequencies even

exceeding 300 MHz.

- It is commonly used in switching power supplies at frequencies of 20 GHz
- Its low noise figure finds application in sensitive communication receivers likeradars.
- It is also used in clipping and clamping circuits and in computer gating.
- Schottky barrier diodes are used in bipolar transistor TTL based **74LS (low power Schottky)** and **74S** (Schottky) families of logic circuits . The Schottky diode by preventing the BJT going into hard saturation reduces the switching time of BJT from saturation to cut off.
- Schottky diodes are often used as ant saturation clamps on transistors.
- They play an important role in GaAs circuits.
- They are used as rectifiers in high power applications circuits.
- Schottky Barrier Diodes are used in voltage clamping applications.
- Schottky Barrier Diodes are used in stand-alone photo voltaic systems
- They are used in radio frequency applications as mixer (or) detector diode

2.9 VARACTOR DIODE

The varactor diode was named because of the variable reactor or variable reactance or variable capacitor or variable capacitance property of these diodes. A varactor diode is considered as a special type of diode that is widely used in the electronics industry and is used in various electronics applications. Varactor diode is also a semiconductor microwave solid-state device, it is frequently used in applications where variable capacitance is desired which can be achieved by controlling voltage.

Varactor diodes are also termed as varicap diodes, in fact, these days they are usually termed as varactor diodes. Even though the variable capacitance effect can be exhibited by the normal diodes (P-N junction diodes), but, varactor diodes are preferred for giving the desired capacitance changes as they are special types of diodes. These diodes are specially manufactured and optimized such that they enables a very high range of changes in capacitance. Varactor diodes are again classified into various types based on the varactor diode junction properties. And, these are termed as abrupt varactor diodes, gallium-arsenide varactor diodes, and hyperabrupt varactor diodes.

The varactor diode symbol consists of the capacitor symbol at one end of the diode that represents the variable capacitor characteristics of the varactor diodes. n general, it looks

like a normal PN- junction diode in which one terminal is termed as the cathode and the other terminal is termed as anode. Here, varactor diode consists of two lines at one end (cathode end of normal diode) that indicates the capacitor symbol.

VARACTOR DIODE WORKING

To understand the working principle of the varactor diode, we must know what is a capacitor and how can we change the capacitance. Let us consider the capacitor that consists of two plates separated by an insulating dielectric as shown in the figure 20**.**

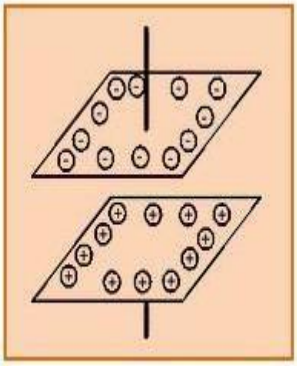

Capacitor

We know that the capacitance of an electrical capacitor is directly proportional to the area of the plates, as the area of the plates increases the capacitance of the capacitor increases. Consider the reverse biased mode of the diode, in which P-type region and N-type region are able to conduct and thus can be treated as two plates. The depletion region between the P-type and N-type regions can be considered as insulating dielectric. Thus, it is exactly similar to the capacitor shown above.

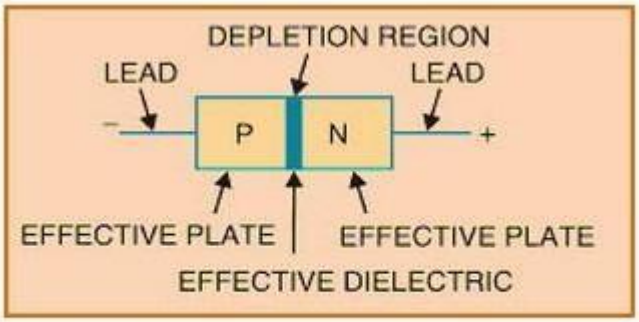

Varactor Diode with P-N Junctoin and Depletion Region

The size of the depletion region of diode changes with change in reverse bias. If the varactor diode reverse voltage is increased, then the depletion region size increases. Similarly, if the varactor diode reverse voltage is decreased, then the depletion region size

decreases or narrows. Hence, by varying the reverse bias of the varactor diode the capacitance can be varied

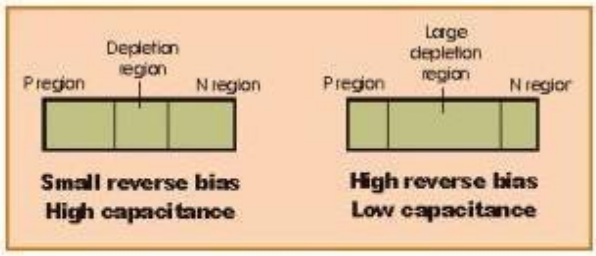

Variation of Capacitance with Variation in Depletion Region of Varactor Diode

CHARACTERISTICS

- The varactor diodes have the following significant characteristics:

- Varactor diodes produces considerably less noise compared to other convention
- These diodes are available at low costs.
- Varactor diodes are more reliable.
- The varactor diodes are small in size and hence, they are very light weight.
- There is no useful purpose of varactor diode operated when it is operated in forward bias.
- Increase in reverse bias of varactor diode increases the capacitance as shown in the figure below.

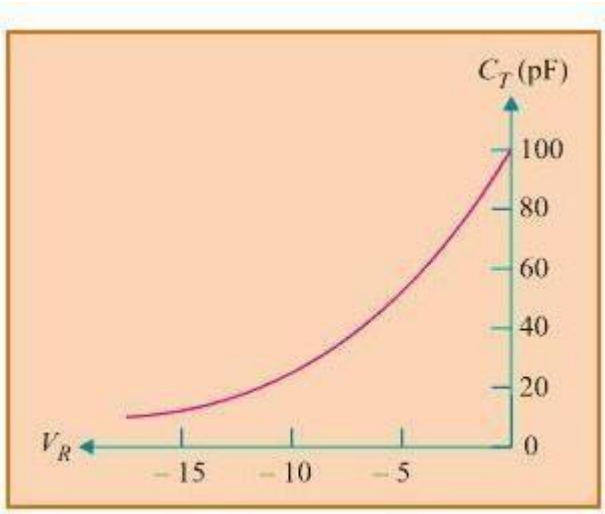

Characteristics of Varactor Diode

APPLICATIONS

- Few important applications of varactor diodes can be listed as follows:
- **RF Filters**
- Voltage Controlled Oscillators (VCOs)
- Varactor diodes can be used as frequency modulators.

- In microwave receiver LO, varactor diodes can be used as frequency multipliers.
- Varactor diodes can be used as RF phase shifters.
- Varactor diodes are used to vary the capacitance in variable resonant tank LC circuits. Since the junction capacitance of a varactor is in the pF range, it is suitable for use in highfrequency circuits.
- automatic frequency control device,
- FM modulator,
- adjustable band-pass filter
- Parametric amplifier

2.10 TUNNEL DIODE

This diode was first introduced by Dr. Leo Easki in 1958.

A tunnel diode is a pn junction that exhibits negative resistance between two values of forward voltage (i.e., between peak-point voltage and valley-point voltage).

A conventional diode exhibits *positive resistance when it is forward biased or reverse biased. However, if a semiconductor junction diode is heavily doped with impurities, it exhibits negative resistance (i.e. current decreases as the voltage is increased) in certain regions in the forward direction. Such a diode is called tunnel diode

CONSTRUCTION

It is a high-conductivity two-terminal P-N junction diode having doping density about 1000 times higher as compared to an ordinary junction diode. This heavy doping produces following three unusual effects :

Firstly, it reduces the width of the depletion layer to an extremely small value (about 0.00001 mm).

Secondly, it reduces the reverse breakdown voltage to a very small value (approaching zero) with the result that the diode appears to be broken down for any reverse voltage.

Thirdly, it produces a negative resistance section on the V/I characteristic of the diode. It is called a tunnel diode because due to its extremely thin depletion layer, electrons are able to tunnel through the potential barrier at relatively low forward bias voltage (less than 0.05 V).

Such diodes are usually fabricated from germanium, gallium-arsenide (GaAs) and gallium antimonide (GaSb). The commonly-used schematic symbols for the diode are shown in fig 23. It should be handled with caution because being a low-power device, it can be easily damaged by heat and static electricity.

THEORY.

The tunnel diode is basically a pn junction with heavy doping of p-type and n-type semiconductor materials. In fact, a tunnel diode is doped approximately 1000 times as

heavily as a conventional diode. This heavy doping results in a large number of majority carriers. Because of the large number of carriers, most are not used during the initial recombination that produces the depletion layer. As a result, the depletion layer is very narrow. In comparison with conventional diode, the depletion layer of a tunnel diode is 100 times narrower. The operation of a tunnel diode depends upon the tunneling effect and hence the name.

TUNNELING EFFECT

The heavy doping provides a large number of majority carriers. Because of the large number of carriers, there is much drift activity in p and n sections. This causes many valence electrons to have their energy levels raised closer to the conduction region. Therefore, it takes only a very small applied forward voltage to cause conduction.The movement of valence electrons from the valence energy band to the conduction band with little or no applied forward voltage is called tunneling. Valence electrons seem to tunnel through the forbidden energy band.

As the forward voltage is first increased, the diode current rises rapidly due to tunneling effect. Soon the tunneling effect is reduced and current flow starts to decrease as the forward voltage across the diode is increased. The tunnel diode is said to have entered the negative resistance region. As the voltage is further increased, the tunneling effect plays less and less part until a valley-point is reached. From now onwards, the tunnel diode behaves as ordinary diode i.e., diode current increases with the increase in forward voltage.

V-I CHARACTERISTIC.

As the forward voltage across the tunnel diode is increased from zero, electrons from the nregion “tunnel” through the potential barrier to the p-region. As the forward voltage increases, the diode current also increases until the peak-point P is reached. The diode current has now reached peak current IP (= 2.2 mA) at about peak-pointvoltage VP (0.07 V). Until now the diode has exhibited positive resistance. (ii) As the voltage isincreased beyond VP, the tunneling action starts decreasing and the diode current decreases as the forward voltage is increased until valley-point V is reached at valley- point voltage VV (= 0.7V). In the region between peak-point and valley-point (i.e., between points P and V), the diode exhibits negative resistance i.e., as the forward bias is increased, the current decreases. This suggests that tunnel diode, when operated in the negative resistance region, can be used as an oscillator or a switch.

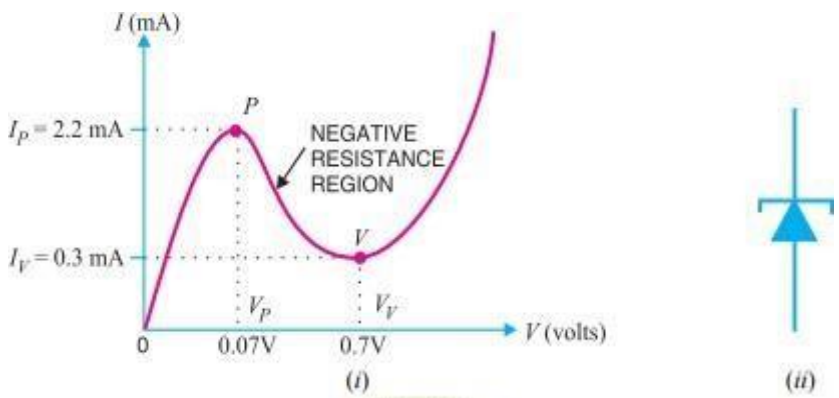

Fig. 7.18

(iii) When forward bias is increased beyond valley-point voltage VV (= 0.7 V), the tunnel diode behaves as a normal diode. In other words, from point V onwards, the diode current increases with the increase in forward voltage i.e., the diode exhibits positive resistance once again.It may be noted that a tunnel diode has a high reverse current but operation under this condition is not generally used.

TUNNELING EFFECT

In a normally-doped P-N junction, the depletion layer is relatively wide and a potential barrier exists across the junction. The charge carriers on either side of the junction cannot cross over unless they possess sufficient energy to overcome this barrier (0.3 V for Ge and 0.7 V for Si). As is well-known, width of the depletion region depends directly on the doping density of the semiconductor. If a P-N junction is doped very heavily (1000 times or more)*, its depletion layer becomes extremely thin (about 0.00001 mm). It is found that under such conditions, many carriers can 'punch through' the junction with the speed of light even when they do not possess enough energy to overcome the potential barrier. Consequently, large forward current is produced even when the applied bias is much less than 0.3 V. This conduction mechanism in which charge carriers (possessing very little energy) bore through a barrier directly instead of climbing over it is called tunneling

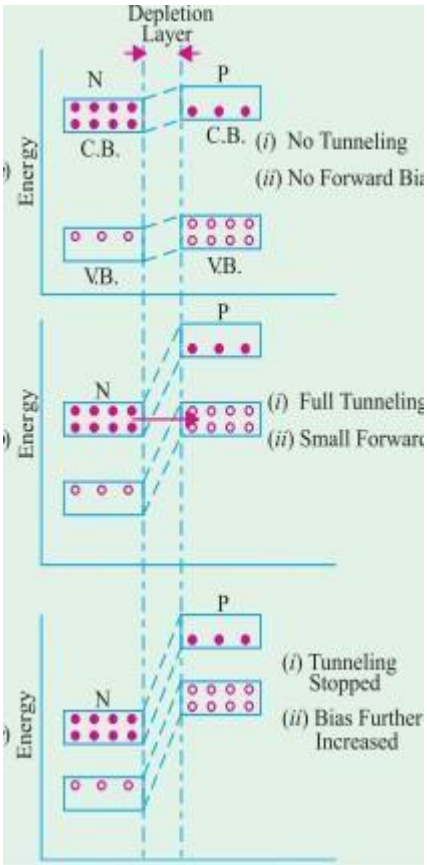

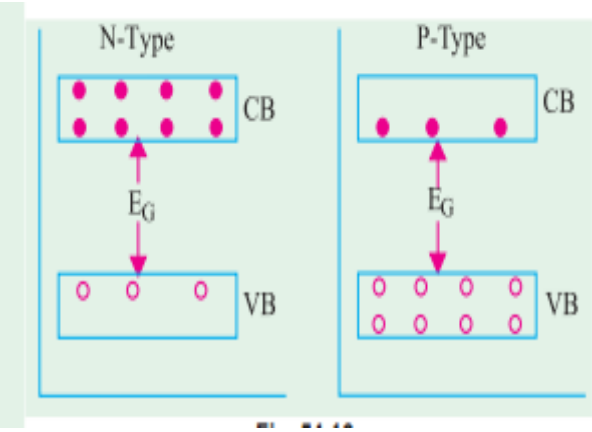

EXPLANATION

Energy band diagrams (EBD) of N-type and Ptype semiconductor materials can be used to explain this tunneling phenomenon. Fig. 54.16 shows the energy band diagram of the two types of silicon separately. As explained earlier (Art. 51.21), in the N- type semiconductor, there is increased concentration of electrons in the conduction band. It would be further increased under heavy doping. Similarly, in a Ptype material, there is increased concentration of holes in the valence band for similar reasons. (a) No Forward Bias When the N-type and P-type materials are joined, the EBD under no-bias conditiion becomes as shown in Fig. 24(a).

The junction barrier produces only a rough alignment of the two materials and their respective valence and conduction bands. As seen, the depletion region between the two is extremely narrow due to very heavy doping on both sides of the junction. The potential hill is also increased as shown.

(b) Small Forward Bias When a very small forward voltage (≅ 0.1 V) is applied, the EBDs become as shown in Fig. 54.17 (b). Due to the downward movement of the N-region, the P-region valence band becomes exactly aligned with the N-region

conduction band. At this stage, electrons tunnel through the thin depletion layer with the velocity of light thereby giving rise to a large current called peak current Ip.

(c) Large Forward Bias When the forward bias is increased further, the two bands get out of alignment as shown in Fig. 24(c). Hence, tunneling of electrons stops thereby decreasing the current. Since current decreases with increase in applied voltage (i.e. dV/dI is negative), the junction is said to possess negative resistance at this stage. This resistance increases throughout the negative region. However, it is found that when applied forward voltage is increased still further, the current starts increasing once again as in a normal junction diode.

APPLICATIONS

Tunnel diode is commonly used for the following purposes :

1. as an ultrahigh-speed switch-due to tunneling mechanism which essentially takes place at the speed of light. It has a switching time of the order of nanoseconds or even picoseconds;

2. as logic memory storage device − due to triple-valued feature of its curve for current.

3. as microwave oscillator at a frequency of about 10 GHz − due to its extremely small capacitance and inductance and negative resistance.

4. in relaxation oscillator circuits − due to its negative resistance. In this respect, it is very similar to the unijunction transistor.

ADVANTAGES AND DISADVANTAGES

The advantages of a tunnel diode are :

1. low noise,

2. ease of operation,

3. high speed,

4. low power,

5. Insensitivity to nuclear

radiations The disadvantages are

: 1. the voltage range over which it can be operated properly is 1 V or less;

2. being a two-terminal device, it provides no isolation between the input and output circuits

SATHYABAMA
INSTITUTE OF SCIENCE AND TECHNOLOGY
(DEEMED TO BE UNIVERSITY)
Accredited "A" Grade by NAAC | 12B Status by UGC | Approved by AICTE
www.sathyabama.ac.in

SCHOOL OF MECHANICAL ENGINEERING
DEPARTMENT OF MECHATRONICS ENGINEERING

UNIT - 3
Electronic Devices and Circuits-SECA1306

3.1 HYBRID MODEL

The hybrid model has four h-parameters. The "h" stands for hybrid because the parameters are a mix of impedance, admittance and dimensionless units. In common emitter the parameters are:

h_{ie}	input impedance (Ω)
h_{re}	reverse voltage ratio (dimensionless)
h_{fe}	forward current transfer ratio (dimensionless)
h_{oe}	output admittance (Siemen)

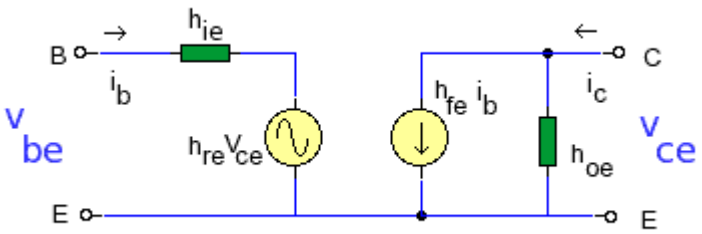

hybrid model is suitable for small signals at mid band and describes the action of the transistor.Two equations can be derived from the diagram,

vbe =hie ib +hre vce
ic = hfe ib + hoe vce

If ib is held constant (ib=0) then hre and hoe can be solved:

hre =vbe /vce |ib =0
hoe = ic / vce | ib = 0

Also if vce is held constant (vce=0) then hie and hfe can be solved:

hie =vbe /ib |vce =0
hfe = ic / ib | vce = 0

ANALYSIS OF A TRANSISTOR AMPLIFIER USING H-PARAMETERS:

To form a transistor amplifier it is only necessary to connect an external load and signal source as indicated in **fig. 1** and to bias the transistor properly.

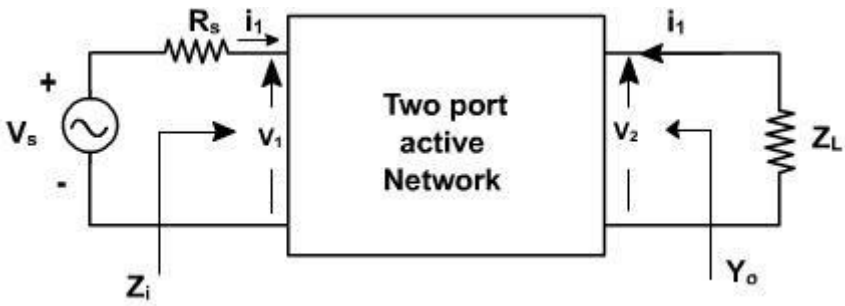

Fig. 1

Consider the two-port network of CE amplifier. R_S is the source resistance and Z_L is the load impedence h-parameters are assumed to be constant over the operating range. The ac equivalent circuit is shown in fig. 2. (Phasor notations are used assuming sinusoidal voltage input). The quantities of interest are the current gain, input impedence, voltage gain, and output impedence.

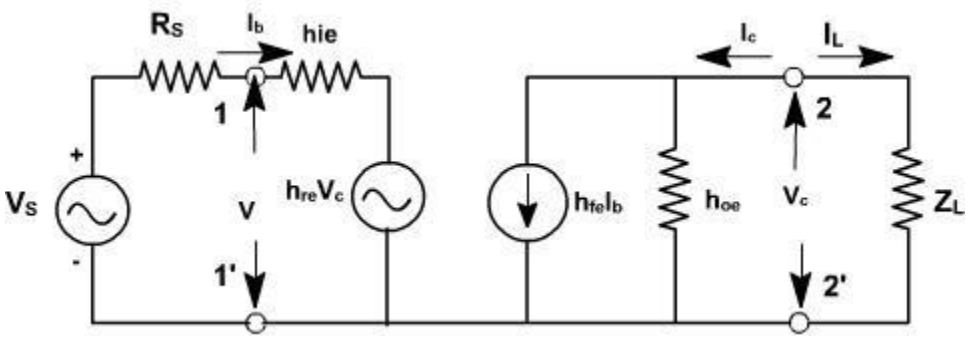

Current gain:

For the transistor amplifier stage, A_i is defined as the ratio of output to input currents.

$$A_I = \frac{I_L}{I_1} = \frac{-I_2}{I_1}$$

Input impedence:

The impedence looking into the amplifier input terminals (1,1') is the input impedance Z_i

$$Z_i = \frac{V_b}{I_b}$$

$$V_b = h_{ie} I_b + h_{re} V_c$$

$$\frac{V_b}{I_b} = h_{ie} + h_{re} \frac{V_c}{I_b}$$

$$= h_{ie} - \frac{h_{re} I_c Z_L}{I_b}$$

$$\therefore Z_i = h_{ie} + h_{re} A_I Z_L$$

$$= h_{ie} - \frac{h_{re} h_{fe} Z_L}{1 + h_{oe} Z_L}$$

$$\therefore Z_i = h_{ie} - \frac{h_{re} h_{fe}}{Y_L + h_{oe}} \qquad (\text{since } Y_L = \frac{1}{Z_L})$$

Voltage gain:

The ratio of output voltage to input voltage gives the gain of the transistors.

$$A_v = \frac{V_C}{V_b} = -\frac{I_C Z_L}{V_b}$$

$$\therefore A_v = \frac{I_B A_i Z_L}{V_b} = \frac{A_i Z_L}{Z_i}$$

Output Admittance:

$$Y_0 = \left.\frac{I_c}{V_c}\right|_{V_s} = 0$$

$$I_c = h_{fe} I_b + h_{oe} V_c$$

$$\frac{I_c}{V_c} = h_{fe}\frac{I_b}{V_c} + h_{oe}$$

when $V_s = 0$, $\quad R_s . I_b + h_{ie} . I_b + h_{re} V_c = 0.$

$$\frac{I_b}{V_c} = -\frac{h_{re}}{R_s + h_{ie}}$$

$$\therefore Y_0 = h_{oe} - \frac{h_{re}\, h_{fe}}{R_s + h_{ie}}$$

Voltage amplification taking into account source impedance (R_S) is given by

$$A_{VS} = \frac{V_c}{V_s} = \frac{V_c}{V_b} * \frac{V_b}{V_S} \qquad \left(V_b = \frac{V_s}{R_s + Z_i} * Z_i\right)$$

$$= A_V . \frac{Z_i}{Z_i + R_s}$$

$$= \frac{A_i Z_L}{Z_i + R_s}$$

It is defined as

A_v is the voltage gain for an ideal voltage source ($R_v = 0$).

Consider input source to be a current source I_S in parallel with a resistance R_S as shown in fig. 3.

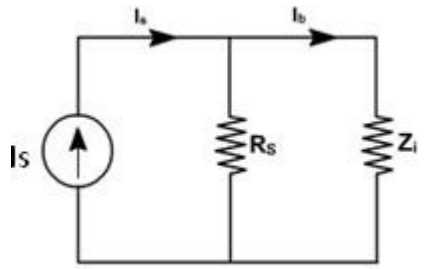

Fig. 3

In this case, overall current gain A_{IS} is defined as

$$A_{I_s} = \frac{I_L}{I_s}$$

$$= -\frac{I_c}{I_s}$$

$$= -\frac{I_c}{I_b} * \frac{I_b}{I_s} \qquad \left(I_b = \frac{I_s * R_s}{R_s + Z_i} \right)$$

$$= A_I * \frac{R_s}{R_s + Z_i}$$

$$\text{If } R_s \to \infty, \quad A_{I_s} \to A_I$$

h-parameters

To analyze multistage amplifier the h-parameters of the transistor used are obtained from manufacture data sheet. The manufacture data sheet usually provides h-parameter in CE configuration. These parameters may be converted into CC and CB values. For example fig. 4 hrc in terms of CE parameter can be obtained as follows.

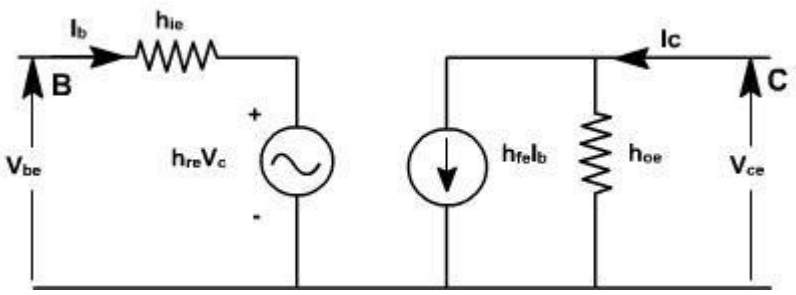

Fig. 4

For CE transistor configuaration Vbe = hie Ib + re Vce

Ic = h fe Ib + hoe Vce

The circuit can be redrawn like CC transistor configuration as shown in fig. 5. Vbc =

hie Ib + hrc Vec

Ic = hfe Ib + hoe Vec

hybrid model for transistor in three different configurations

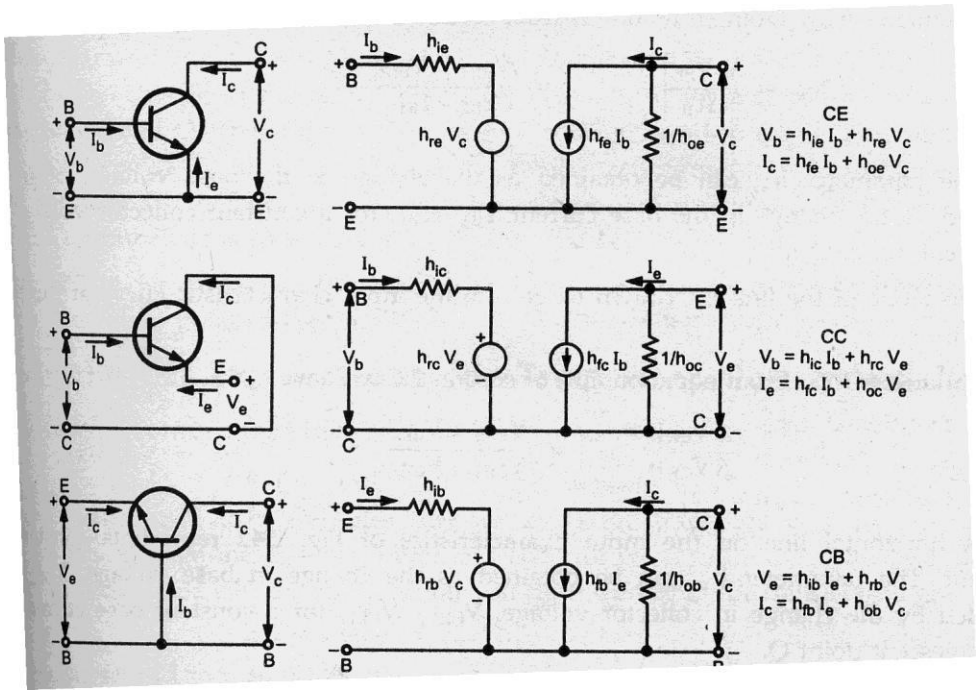

Typical h-parameter values for a transistor

Parameter	CE	CC	CB
h_i	1100 Ω	1100 Ω	22 Ω
h_r	2.5×10^{-4}	1	3×10^{-4}
h_f	50	-51	-0.98
h_o	25 µA/V	25 µA/V	0.49 µA/V

Analysis of a Transistor amplifier circuit using h-parameters

A transistor amplifier can be constructed by connecting an external load and signal source and biasing the transistor properly.

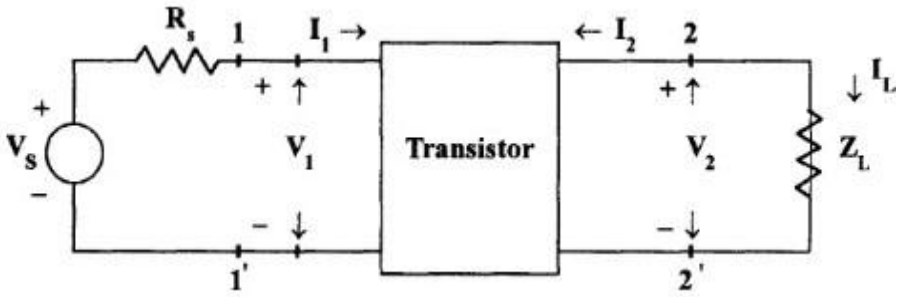

Fig.1.4 Basic Amplifier Circuit

The two port network of Fig. 1.4 represents a transistor in any one of its configuration. It is assumed that h-parameters remain constant over the operating range.The input is sinusoidal and I_1,V- $_1$,I_2 and V_2 are phase quantities

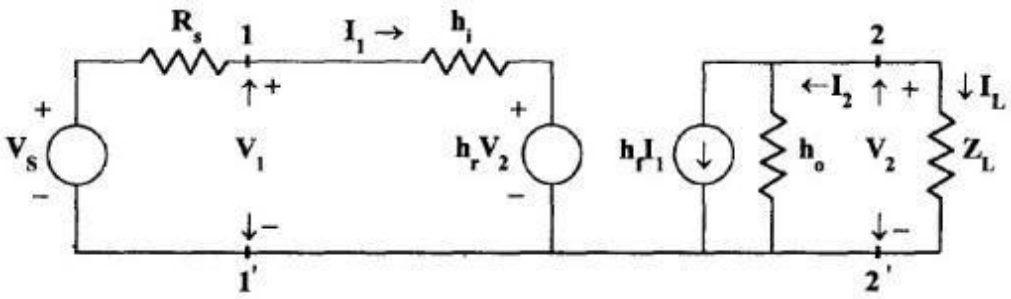

Fig. 1.5 Transistor replaced by its Hybrid Model

Current Gain or Current Amplification (A_i)

For transistor amplifier the current gain A_i is defined as the ratio of output current to input current,i.e,

$A_i = I_L / I_1 = -I_2 / I_1$

From the circuit of Fig

$I_2 = h_f I_1 + h_o V_2$ Substituting $V_2 = I_L Z_L = -I_2 Z_L$

$I_2 = h_f I_1 - I_2 Z_L h_o$

$I_2 + I_2Z_L h_o = h_f I_1$ $I_2(1+ Z_L h_o) = h_f I_1$

$A_i = -I_2 / I_1 = - h_f / (1+ Z_L h_o)$ Therefore,

$A_i = - h_f / (1+ Z_L h_o)$

Input Impedence (Z_i)

In the circuit of Fig , R_S is the signal source resistance .The impedence seen when looking into the amplifier terminals (1,1') is the amplifier input impedence Z_i,

$Z_i = V_1 / I_1$

From the input circuit of Fig $V_1 = h_i I_1 + h_rV_2$ $Z_i = (h_i I_1 + h_rV_2) / I_1$

$= h_i + h_r V_2 / I_1$ Substituting

$V_2 = -I_2 Z_L = A_1I_1Z_L$

$Z_i = h_i + h_r A_1I_1Z_L / I_1$

$= h_i + h_r A_1Z_L$ Substituting for A_i

$Z_i = h_i - h_f h_r Z_L / (1+ h_oZ_L)$

$= h_i - h_f h_r Z_L / Z_L(1/Z_L+ h_o)$

Taking the Load admittance as $Y_L =1/ Z_L$ $Z_i = h_i - h_f h_r / (Y_L + h_o)$

Voltage Gain or Voltage Gain Amplification Factor(A_v)

The ratio of output voltage V_2 to input voltage V_1 give the voltage gain of the

transistor i.e, $A_v = V_2 / V_1$

Substituting

$V_2 = -I_2 Z_L = A_1 I_1 Z_L$

$A_v = A_1 I_1 Z_L / V_1 = A_i Z_L / Z_i$

Output Admittance (Y_o)

Y_o is obtained by setting V_S to zero, Z_L to infinity and by driving the output terminals from a generator V_2. If the current V_2 is I_2 then $Y_o = I_2/V_2$ with $V_S=0$ and $R_L = \infty$.

From the circuit of fig

$I_2 = h_f I_1 +$

$h_o V_2$

Dividing by

V_2,

$I_2 / V_2 = h_f I_1/V_2 + h_o$

With $V_2 = 0$, by KVL in input circuit,

$R_S I_1 + h_i I_1 +$

$h_r V_2 = 0 (R_S + h_i)$

$I_1 + h_r V_2 = 0$

Hence, $I_2 / V_2 = -h_r / (R_S + h_i)$

$= h_f (-h_r/(R_S + h_i) + h_o$ $Y_o = h_o - h_f$

$h_r/(R_S + h_i)$

The output admittance is a function of source resistance. If the source impedence is resistive then Y_o is real.

Voltage Amplification Factor(A_{vs}) taking into account the resistance (R_s) of the source

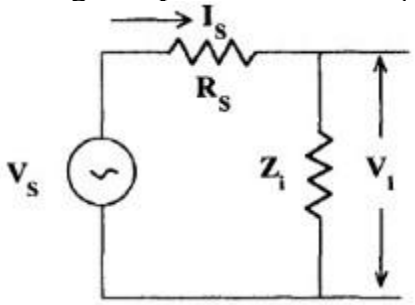

Fig. 5.6 Thevenin's Equivalent Input

Circuit This overall voltage gain A_{vs}

is given by

$A_{vs} = V_2 / V_S = V_2V_1 / V_1V_S = A_v V_1 / V_S$

From the equivalent input circuit using Thevenin's equivalent for the source

shown in Fig. 5.6 $V_1 = V_S Z_i / (Z_i + R_S)$

$V_1 / V_S = Z_i / (Z_i + R_S)$

Then, $A_{vs} =$

$A_v Z_i / (Z_i + R_S)$

Substituting $A_v =$

A_iZ_L / Z_i

$A_{vs} = A_iZ_L / (Z_i + R_S)$

$A_{vs} = A_iZ_L R_S / (Z_i + R_S) R_S$

Avs = AisZL / RS

Current Amplification (A_{is}) taking into account the sourse Resistance(R_S)

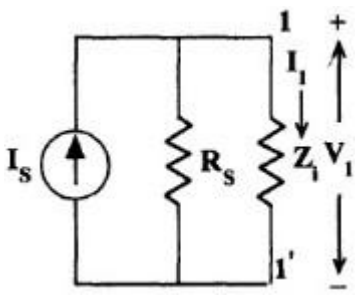

Fig. 1.7 Norton's Equivalent Input Circuit

The modified input circuit using Norton's equivalent circuit for the calculation of A_{is} is shown in Fig. 1.7 Overall Current Gain, $A_{is} = -I_2 / I_S = - I_2 I_1 / I_1 I_S = A_i I_1 / I_S$

From Fig. 1.7

I_1

$= I_S R_S / (R_S + Z_i) I_1 / I_S = R_S / (R_S + Z_i)$

and hence, $A_{is} = A_i R_S / (R_S + Z_i)$

Operating Power Gain (A_P)

The operating power gain A_P of the transistor is defined as $A_P = P_2 / P_1 = -V_2 I_2 / V_1 I_1 = A_v A_i = A_i A_i Z_L / Z_i$

$A_P = A^2 (Z_L / Z_i)$

Small Signal analysis of a transistor amplifier

$A_i = - h_f / (1+ Z_L h_o)$	$A_v = A_i Z_L / Z_i$
$Z_i = h_i + h_r A_1 Z_L = h_i - h_f h_r / (Y_L + h_o)$	$A_{vs} = A_v Z_i / (Z_i + R_S) = A_i Z_L / (Z_i + R_S)$ $= A_{is} Z_L / R_S$
$Y_o = h_o - h_f h_r / (R_S + h_i) = 1/ Z_o$	$A_{is} = A_i R_S / (R_S + Z_i) = A_{vs} = A_{is} R_S / Z_L$

3.2 APPROXIMATE MODEL OF CE CB AND CC AMPLIFIERS

In the analysis of transistor amplifier, we have as far used the exact h-model for the transistor. In practice, we may conveniently use an approximately h-model for the transistor which introduces error < 10% in most cases.

HYBRID MODEL TO APPROIMAE MODEL CONVERSION OF CE AMPLIFIER

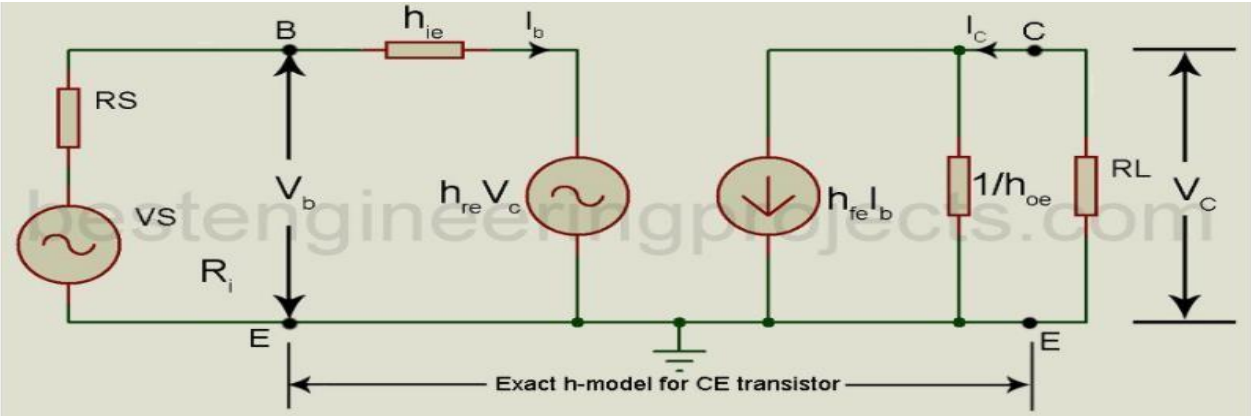

Figure 1: Equivalent circuit using exact h-model

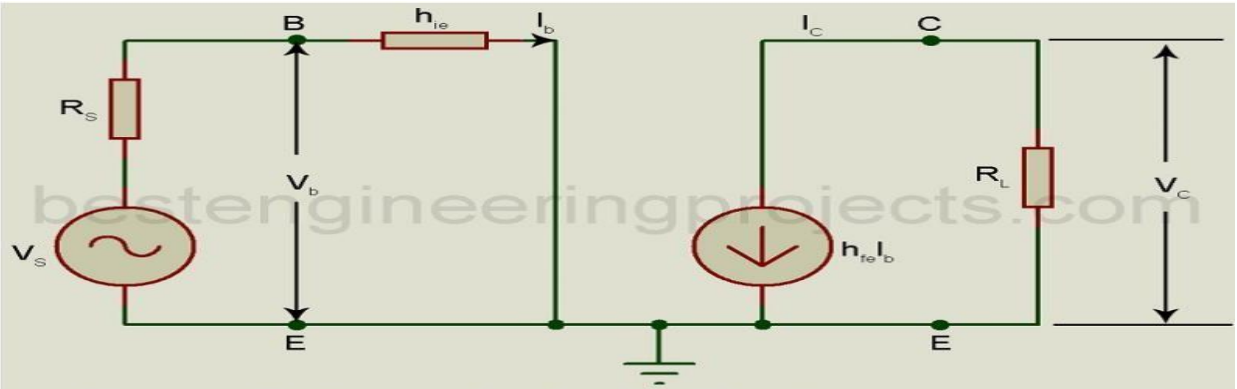

Figure 2: Equivalent circuit using approximate h-model of CE amplifier

The following steps are used to driving the approximate h-model:

- If hoe. RL < 0.1, then we may neglected 1/ hoe, being in parallel with RL.
- Having neglected hoe, the collected current IC equals hfe. Ib
- hre*hfe is approximately equal to 0.1 so hre.Vc can be neglected when compared to hie.Ib

SIMPLIFIED APPROXIMATE MODEL OF CE AMPLIFIER

The approximate CE h-model of Figure 2 is redrawn in figure 3. This model may be used for any of the three configurations by grounding the appropriate node and

analysis done accordingly.

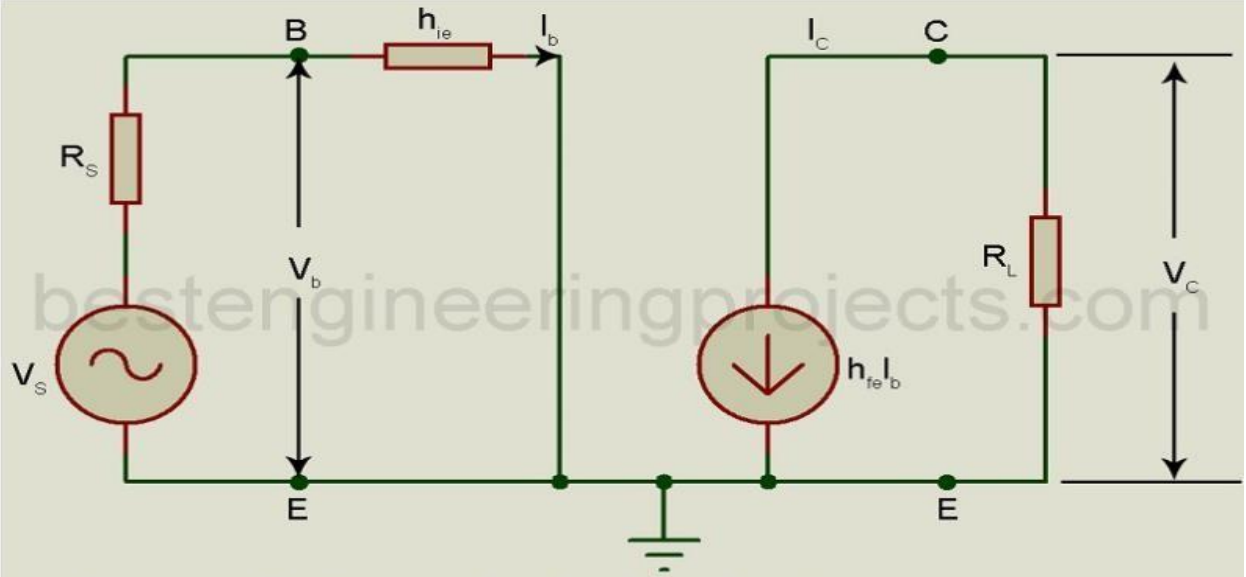

Figure 2: Equivalent circuit using approximate h-model of CE amplifier

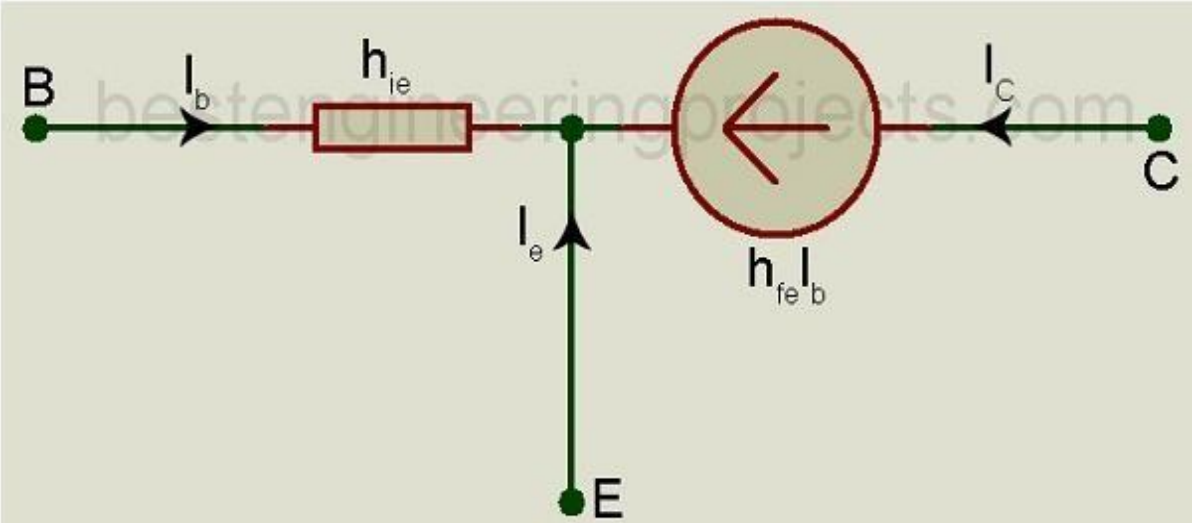

Figure 3: Approximate h-model valid for all the three configurations of a transistor

ANALYSIS OF CE AMPLIFIER USING APPROXIMATE MODEL

Figure 2 gives the equivalent circuit of CE amplifier using approximate h-model for the transistor. For this equivalent circuit we get,

Current gain $$A_I = \frac{-h_{fe} \times I_b}{I_b} = -h_{fe} \quad .....(2)$$

Input resistance $R_i = h_{ie}$

Voltage gain $$A_V = A_I \times \frac{R_L}{R_i} = \frac{-h_{fe} \times R_L}{h_{ie}} \quad .....(3)$$

Output Resistance R_0: From this approximate equivalent circuit with V_s=0 with external voltage source connected across the output, we get I_b=0 and therefore I_c.=0. Hence output resistance $R_0 = \infty$. However, in actual practice, R_0 lies between 40KΩ and 80KΩ depending on the value of R_s.

ANALYSIS OF CB AMPLIFIER USING APPROXIMATE MODEL

From figure 4 gives the equivalent circuit of a CB amplifier using the approximate model for the transistor as given in figure 2 with base grounded, the input applied between emitter and base and output obtained across load resistor R_L between the collector and the base.

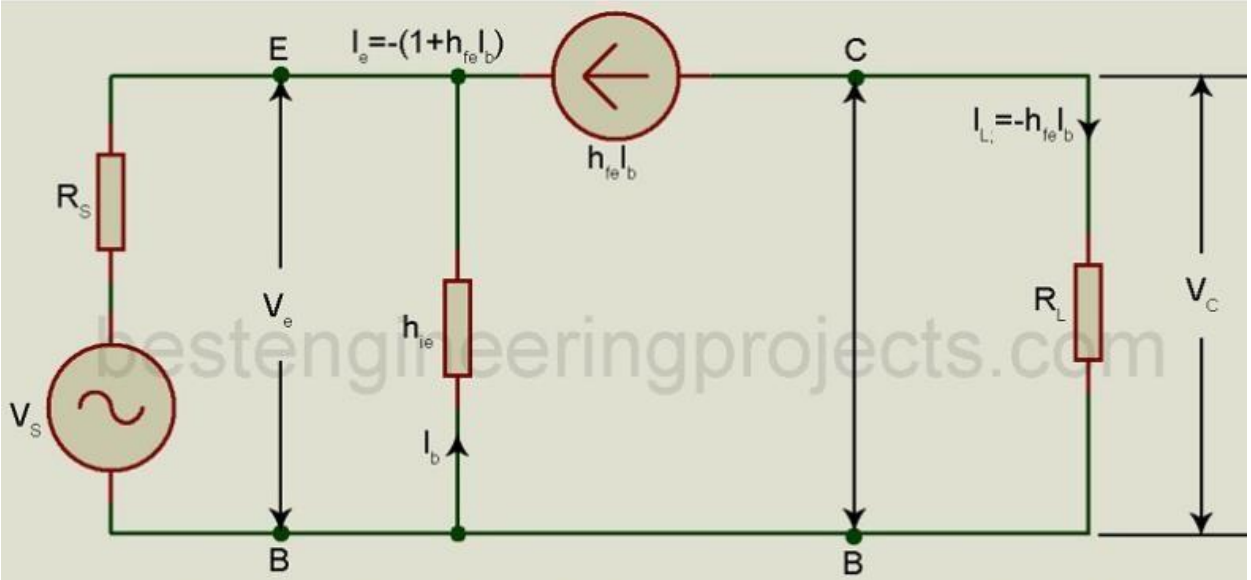

bestengineeringprojects.com

Figure 4: Equivalent circuit of a CB amplifier using approximate h-model

1) current gain :

From the figure above $A_I = \frac{-I_c}{I_e} = \frac{-h_{fe} I_b}{I_e}$

$$I_e = -(I_b + I_c)$$

$$I_e = -(I_b + h_{fe} I_b) = -(1+h_{fe}) I_b$$

$$\therefore \quad A_I = \frac{-h_{fe} I_b}{-(1+h_{fe}) I_b} = \frac{h_{fe}}{1+h_{fe}} = -h_{fb}$$

2) Input Resistance :

Input Resistance $R_i = \frac{V_e}{I_e}$

From figure $V_e = -I_b h_{ie}$, $I_e = -(1+h_{fe}) I_b$

$$R_i = \frac{h_{ie}}{1+h_{fe}} = h_{ib}$$

3) voltage gain :

$$A_V = \frac{V_c}{V_e}$$

$$V_c = -I_c R_L = -h_{fe} I_b R_L$$

$$V_e = -I_b h_{ie}$$

$$A_v = \frac{h_{fe} R_L}{h_{ie}}$$

<u>output</u> <u>Impedance</u>

$$R_o = \frac{V_c}{I_c} \quad \text{with} \quad V_s = 0, \quad R_L = \infty$$

with $V_s = 0$, $I_e = 0$ and $I_b = 0$ hence $I_c = 0$

$$\therefore \quad R_o = \frac{V_c}{0} = \infty$$

ANALYSIS OF CC AMPLIFIER USING APPROXIMATE MODEL

Figure shows the equivalent circuit of cc Amplifier using the approximate model with the collector grounded, input signal applied between base and ground and load connected between emitter and ground.

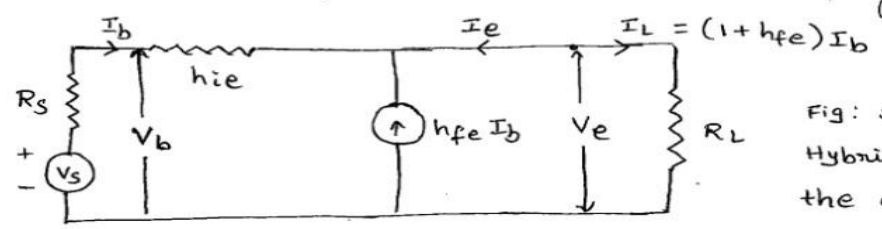

Fig: simplified Hybrid model for the cc circuit

1) current gain :-

$$A_I = \frac{I_L}{I_b} = \frac{(1+h_{fe})\, I_b}{I_b} = (1+h_{fe})$$

2) Input resistance

$$V_b = I_b h_{ie} + (1+h_{fe})\, I_b R_L$$

$$R_i = \frac{V_b}{I_b} = h_{ie} + (1+h_{fe}) R_L$$

3) voltage gain

$$A_V = \frac{V_e}{V_b} = \frac{(1+h_{fe})\, I_b R_L}{[h_{ie} I_b + (1+h_{fe}) I_b R_L]}$$

$$A_V = \frac{(1+h_{fe}) R_L}{h_{ie} + (1+h_{fe}) R_L} = \frac{h_{ie} + (1+h_{fe}) R_L - h_{ie}}{h_{ie} + (1+h_{fe}) R_L}$$

$$A_V = 1 - \frac{h_{ie}}{h_{ie} + (1+h_{fe}) R_L}$$

$$A_V = 1 - \frac{h_{ie}}{R_i} \qquad [\because R_i = h_{ie} + (1+h_{fe}) R_L]$$

4) Output Impedance :-

output ~~impedance~~ admittance (Y_o) = $\dfrac{\text{short circuit current in o/p terminals}}{\text{open circuit voltage b/n o/p terminals}}$

short circuit current in output terminals $= (1+h_{fe}) I_b = (1+h_{fe}) \dfrac{V_s}{R_s + h_{ie}}$

open circuit voltage b/n output terminals $= V_s$

$$\therefore \quad Y_o = \frac{1+h_{fe}}{R_s + h_{ie}} \Rightarrow R_o = \frac{h_{ie} + R_s}{1+h_{fe}}$$

output impedance including R_L ie $R_o' = R_o \| R_L$

3.3 SMALL SIGNAL ANALYSIS OF BJT AMPLIFIERS

The figure 1 shows a CE amplifier circuit. Vs is the AC input voltage source. Vcc is the DC reference voltage. R1, R2, Rc, Re forms the voltage divider circuit. C1,C2 are the coupling capacitors and C3 is the bypass capacitor. Draw the AC equivalent circuit for the CE amplifier circuit and replace the transistor by small signal model.

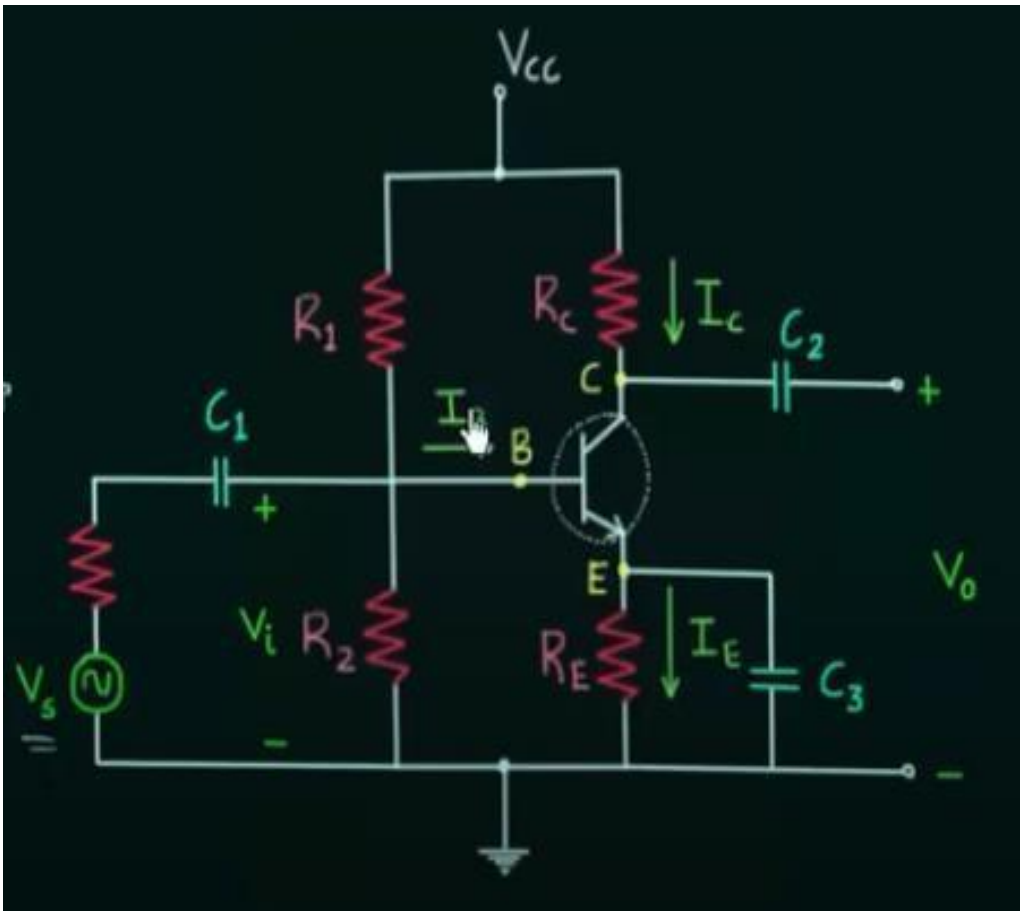

Figure 1 CE amplifier circuit

STEPS TO DRAW THE AC EQUIVALENT CIRCUIT OF CE AMPLIFIER

- Remove the DC source
- Short circuit the capacitors and emitter resistor
- Connect the R2 and Rc resistors to ground to obtain the Ac equivalent circuit of the Ce amplifier

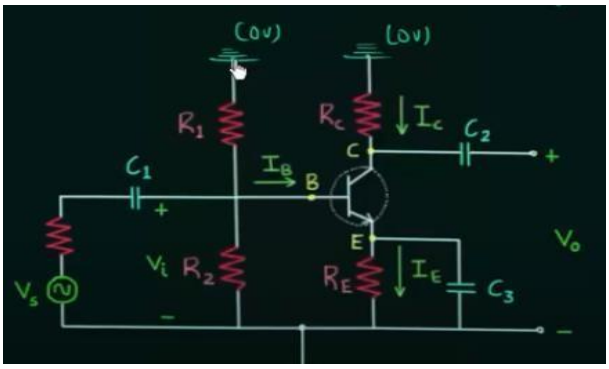

Figure 2 Remove the DC source and

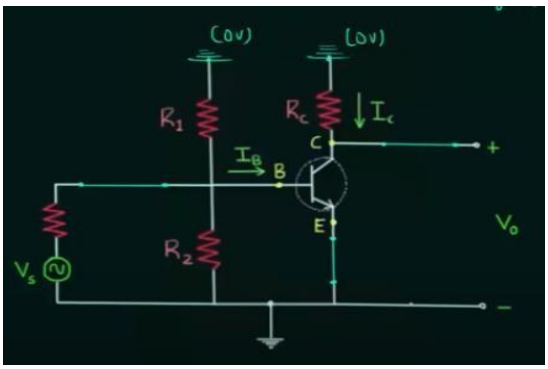

Figure 3 Short circuit the capacitors

Emitter resistor

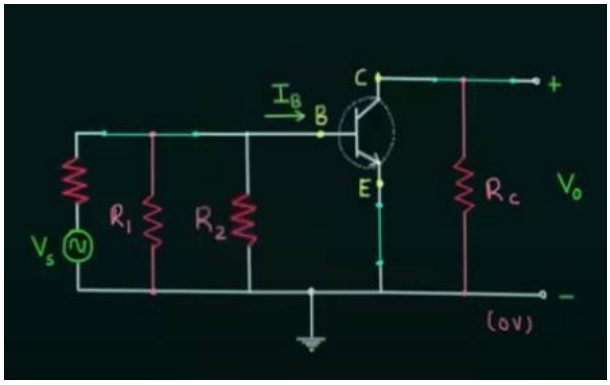

Figure 4 R2 and Rc resistors are grounded

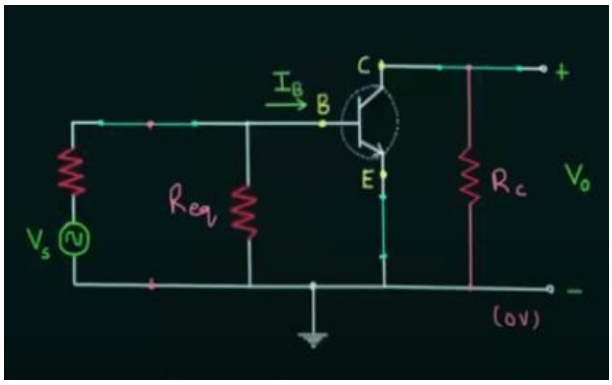

Figure 5 Final Equivalent circuit

SMALL SIGNAL MODEL OF CE AMPLIFIER

The CE NPN transistor can be viewed as tow diodes connected back to back. So replacing the NPN transistors by two diodes is shown in figure 6. The collector diode is replaced by a controlled current source and the emitter diode is replaced with a dynamic resistor as shown in figure 7.

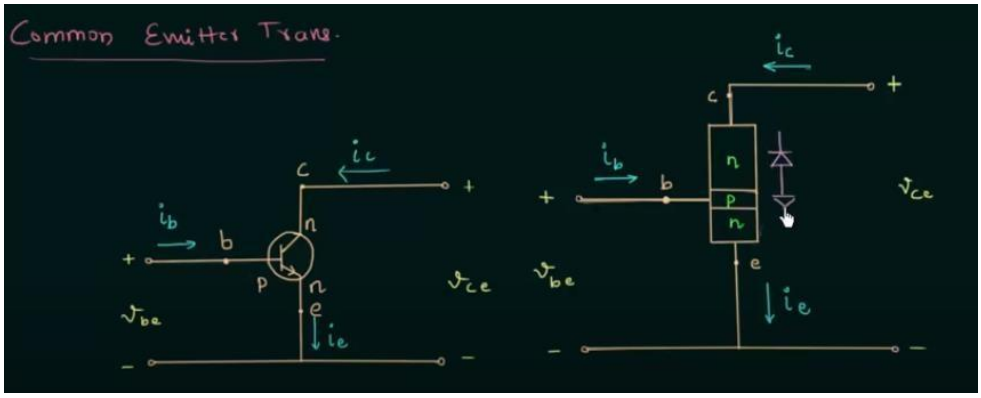

Figure 6 CE NPN transistor is replaced by two diodes connected back to back.

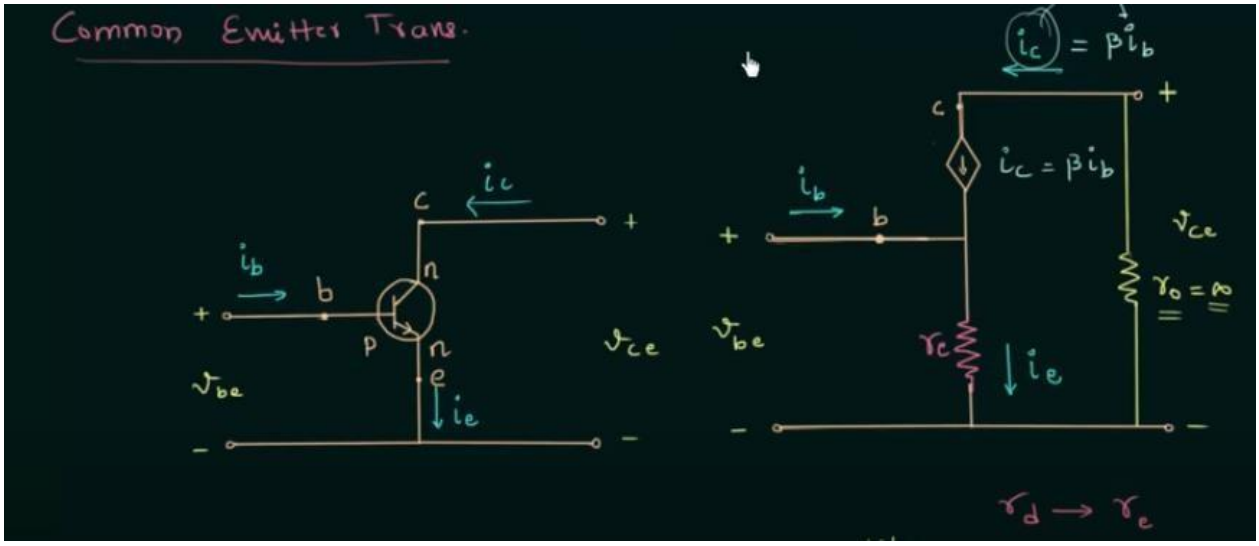

Figure 7 Small signal model of CE amplifier

ANALYSIS OF CE AMPLIFIER USING SMALL SIGNAL MODEL

We know $\beta = \frac{I_c}{I_b}$ = current gain for CE configuration, therefore $I_C = \beta I_b$

The current through the diode is determined by $I_e = I_c + I_b = \beta I_b + I_b = (1+\beta)I_b \simeq \beta I_b$.

The input impedance is determined by $Z_i = \frac{V_i}{I_i} = \frac{V_{be}}{I_b}$

The voltage across the diode resistance is

$V_i = V_{be} = I_e.r_e = \beta I_b.r_e$.

$Z_i = \frac{V_i}{I_b} = \beta r_e = h_{ie}$

It can be proved as follows

From Figure 1.39. We can write $V_i = I_e.r_e$

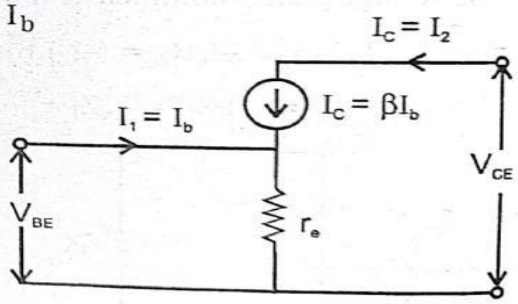

Figure1.39

The input impedance of the circuit is $Z_i = \frac{V_i}{I_e} = r_e$. In 'h' parameters the input impedance is designated as $h_{ib} = Z_i = r_e$.

The voltage gain $V_o = -I_oR_L = (-I_CR_L) = -\beta I_bR_L$

$V_i = I_1.Z_i = I_b.r_e.\beta$

$$A_V = \frac{V_o}{V_i} = -\frac{\beta I_bR_L}{\beta I_br_e} = -\frac{R_L}{r_e}$$

The current gain $A_i = \frac{I_o}{I_i} = \frac{I_C}{I_b} = \frac{\beta i_b}{I_b} = \beta$

SMALL SIGNAL MODEL OF CB AMPLIFIER

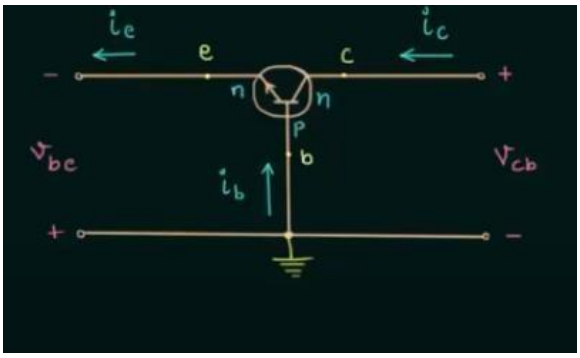

Figure 8 CB configuration amplifier

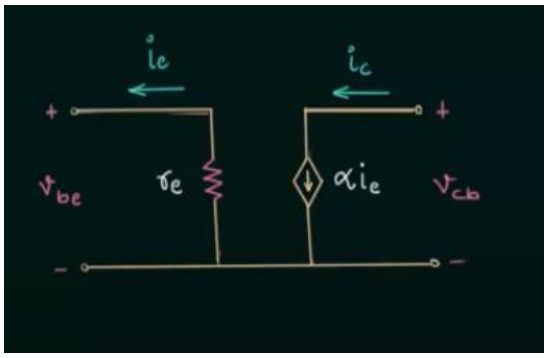

Figure 9 Small signal model of CB

ANALYSIS OF CB AMPLIFIER USING SMALL SIGNAL MODEL

$$V_o = -I_oR_L = (-I_c).R_L = \alpha I_e.R_L.$$

$$V_i = I_iZ_i = I_e.Z_i = I_C.Z_i = r_eI_e$$

$$\therefore \quad A_V = \frac{V_o}{V_i} = \frac{-\alpha I_eR_L}{I_er_e} = -\frac{\alpha R_L}{r_e} \simeq -\frac{R_L}{r_e}$$

The minus sign indicates that output and input voltages are 180° out of phase.

The current gain $A_i = \frac{I_o}{I_i} = \frac{-I_C}{I_e} = \frac{\alpha I_e}{I_e} = -\alpha$

$$A_i = -\alpha \simeq -1$$

SATHYABAMA
INSTITUTE OF SCIENCE AND TECHNOLOGY
(DEEMED TO BE UNIVERSITY)
Accredited "A" Grade by NAAC | 12B Status by UGC | Approved by AICTE
www.sathyabama.ac.in

SCHOOL OF MECHANICAL ENGINEERING
DEPARTMENT OF MECHATRONICS ENGINEERING

UNIT - 4
Electronic Devices and Circuits-SECA1306

4.1 MULTI STAGE AMPLIFIERS

In practical applications, the output of a single state amplifier is usually insufficient, though it is a voltage or power amplifier. Hence they are replaced by Multi-stage transistor amplifiers.In Multi-stage amplifiers, the output of first stage is coupled to the input of next stage using a coupling device. These coupling devices can usually be a capacitor or a transformer. This process of joining two amplifier stages using a coupling device can be called as Cascading.The following figure shows a two-stage amplifier connected in cascade.

The overall gain is the product of voltage gain of individual stages.

$$A_V = A_{V1} \times A_{V2} = \frac{V_2}{V_1} \times \frac{V_0}{V_2} = \frac{V_0}{V_1}$$

Where A_V = Overall gain, A_{V1} = Voltage gain of 1st stage, and A_{V2} = Voltage gain of 2nd stage.

If there are n number of stages, the product of voltage gains of those n stages will be the overall gain of that multistage amplifier circuit.The basic purposes of a coupling device are

- To transfer the AC from the output of one stage to the input of next stage.
- To block the DC to pass from the output of one stage to the input of next stage, which means to isolate the DC conditions.

TYPES OF COUPLING

Joining one amplifier stage with the other in cascade, using coupling devices form a Multi-stage amplifier circuit. There are four basic methods of coupling, using these coupling devices such as resistors, capacitors, transformers etc. Let us have an idea about them.

RESISTANCE-CAPACITANCE COUPLING

This is the mostly used method of coupling, formed using simple resistor-capacitor combination. The capacitor which allows AC and blocks DC is the main coupling element used here.

The coupling capacitor passes the AC from the output of one stage to the input of its next stage. While blocking the DC components from DC bias voltages to effect the next stage.

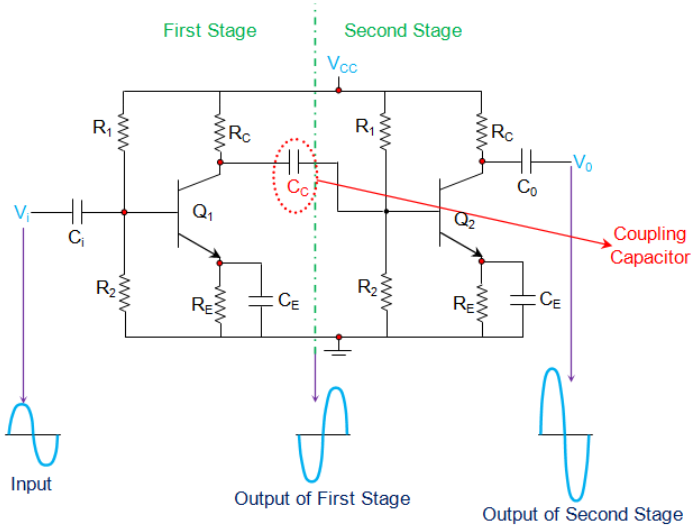

IMPEDANCE COUPLING

The coupling network that uses inductance and capacitance as coupling elements can be called as Impedance coupling network.

In this impedance coupling method, the impedance of coupling coil depends on its inductance and signal frequency which is jwL. This method is not so popular and is seldom employed.

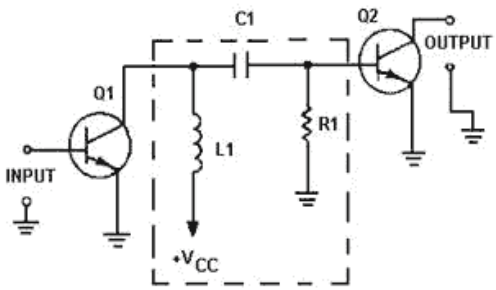

TRANSFORMER COUPLING

The coupling method that uses a transformer as the coupling device can be called as Transformer coupling. There is no capacitor used in this method of

coupling because the transformer itself conveys the AC component directly to the base of second stage.

The secondary winding of the transformer provides a base return path and hence there is no need of base resistance. This coupling is popular for its efficiency and its impedance matching and hence it is mostly used.

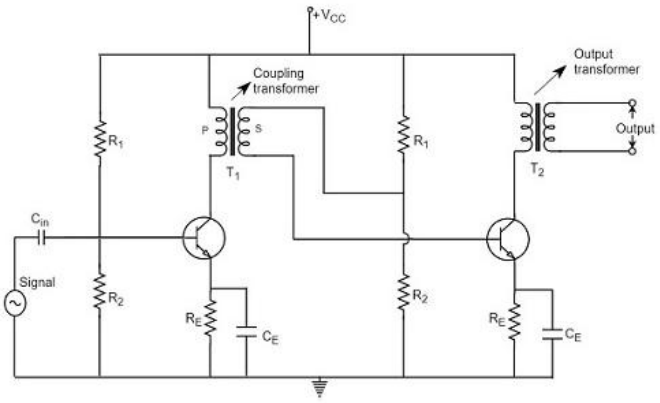

DIRECT COUPLING

If the previous amplifier stage is connected to the next amplifier stage directly, it is called as direct coupling. The individual amplifier stage bias conditions are so designed that the stages can be directly connected without DC isolation.

The direct coupling method is mostly used when the load is connected in series, with the output terminal of the active circuit element. For example, head-phones, loud speakers etc.

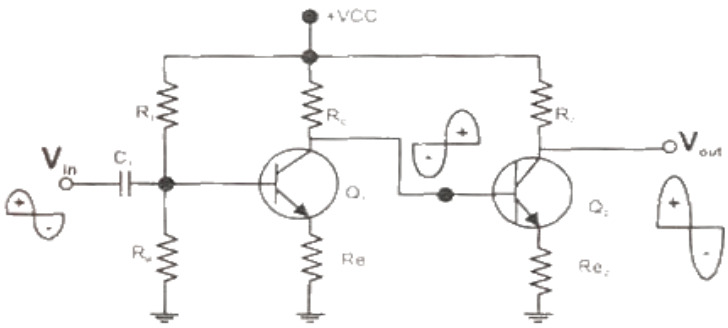

4.2 DIFFERENTIAL AMPLIFIER

The function of a differential amplifier is to amplify the difference between two input signals.The two transistors Q_1 and Q_2 have identical characteristics. The resistances of the circuits are equal, i.e. $R_{E1} = R_{E2}$, $R_{C1} = R_{C2}$. To make a differential amplifier, the two circuits are connected. The two $+V_{CC}$ and $-V_{EE}$ supply terminals are made common because they are same. The two

emitters are also connected and the parallel combination of R_{E1} and R_{E2} is replaced by a resistance R_E. The two input signals v_1 & v_2 are applied at the base of Q_1 and at the base of Q_2. The output voltage is taken between two collectors. The collector resistances are equal and therefore denoted by $R_C = R_{C1} = R_{C2}$.

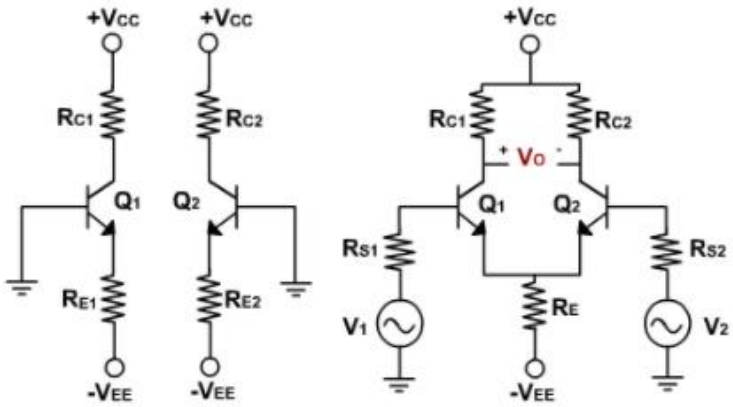

DIFFERENTIAL AMPLIFIER CONFIGURATIONS

The four differential amplifier configurations are following:

- Dual input, balanced output differential amplifier – Two inputs are applied to the differential amplifier and the output is taken across two collectors.

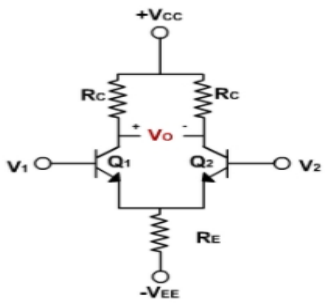

- Dual input, unbalanced output differential amplifier – Two inputs are applied to the differential amplifier and the output is taken across only one collector.

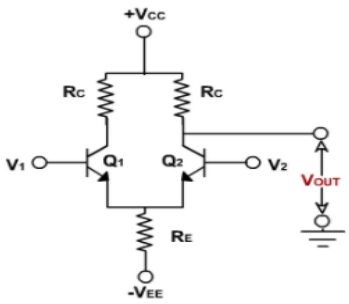

- Single input balanced output differential amplifier – Only one input is applied to the differential amplifier and the output is taken across two collectors.

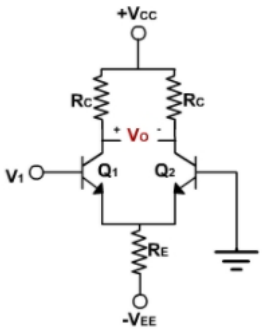

- Single input unbalanced output differential amplifier – Only one input is applied to the differential amplifier and the output is taken across only one collector.

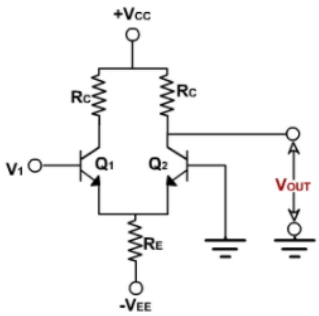

4.3 DC ANALYSIS OF DIFFERENTIAL AMPLIFIER

To obtain the operating point (I_{CC} and V_{CEQ}) for differential amplifier dc equivalent circuit is drawn by reducing the input voltages v_1 and v_2 to zero.The internal resistances of the input signals are denoted by R_S because

R_{S1}= R_{S2}. Since both emitter biased sections of the different amplifier are symmetrical in all respects, therefore, the operating point for only one section need to be determined. The same values of I_{CQ} and V_{CEQ} can be used for second transistor Q_2.

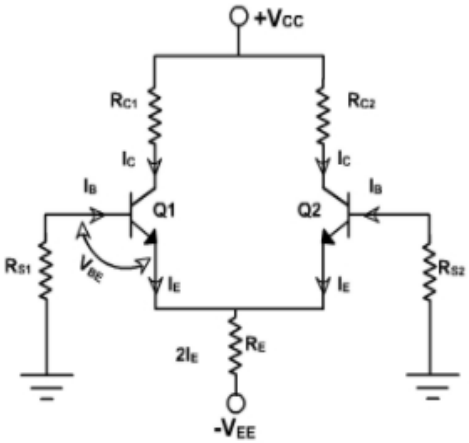

Applying KVL to the base emitter loop of the transistor Q_1.

$$R_S I_B + V_{BE} + 2 I_E R_E = V_{EE}$$

But $I_B = \frac{I_E}{\beta_{dc}}$ and $I_C \approx I_E$

$$\therefore I_E = I_C = \frac{V_{EE} - V_{BE}}{2R_E + R_S / \beta_{dc}} \qquad \text{(E-1)}$$

$V_{BE} = 0.6V$ for S_i and $0.2V$ for G_e.

Generally $\frac{R_S}{\beta_{dc}} << 2R_E$ because R_S is the internal resistance of input signal.

$$\therefore I_E = I_C = \frac{V_{EE} - V_{BE}}{2R_E}$$

The value of R_E sets up the emitter current in transistors Q_1 and Q_2 for a given value of V_{EE}. The emitter current in Q_1 and Q_2 are independent of collector resistance R_C.

The voltage at the emitter of Q_1 is approximately equal to $-V_{BE}$ if the voltage drop across R is negligible. Knowing the value of I_C the voltage at the collector V_C is given by

$$V_C = V_{CC} - I_C R_C$$

and $V_{CE} = V_C - V_E$

$$= V_{CC} - I_C R_C + V_{BE}$$

$$V_{CE} = V_{CC} + V_{BE} - I_C R_C \qquad \text{(E-2)}$$

From the two equations V_{CEQ} and I_{CQ} can be determined. This dc analysis applicable for all types of differential amplifier.

4.4 AC ANALYSIS OF DIFFERENTIAL AMPLIFIER

The circuit is shown in figure, v_1 and v_2 are the two inputs, applied to the bases of Q_1 and Q_2 transistors. The output voltage is measured between the two collectors C_1 and C_2, which are at same dc potentials.

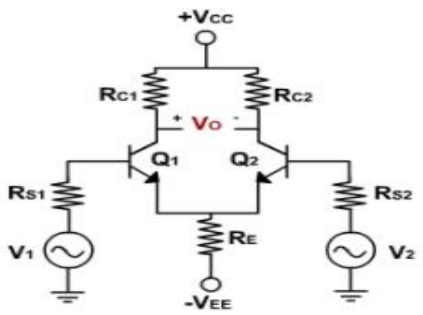

To find the voltage gain A_d and the input resistance R_i of the differential amplifier, the ac equivalent circuit is drawn using r-parameters as shown in figure. The dc voltages are reduced to zero and the ac equivalent of CE

configuration is used.Since the two dc emitter currents are equal. Therefore, resistance r'_{e1} and r'_{e2} are also equal and designated by r'_e .

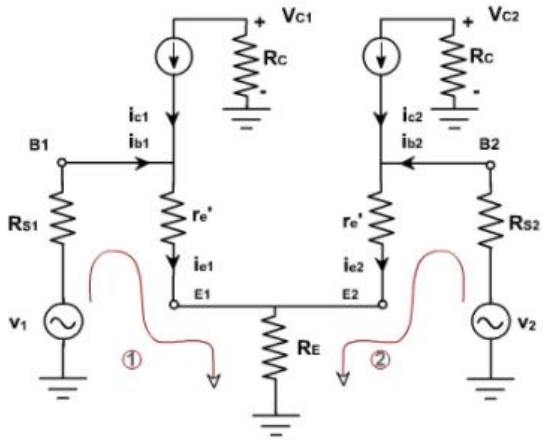

Applying KVL in two loops 1 & 2.

$$v_1 = R_{S1}\, i_{b1} + i_{e1}\, r'_e + (i_{e1} + i_{e2})\, R_E$$
$$v_2 = R_{S2}\, i_{b2} + i_{e2}\, r'_e + (i_{e1} + i_{e2})\, R_E$$

Substituting current relations,

$$i_{b1} = \frac{i_{e1}}{\beta},\quad i_{b2} = \frac{i_{e2}}{\beta}$$
$$V_1 = \frac{R_{S1}}{\beta}\, i_{e1} + r'_e\, i_{e1} + R_E\, (i_{e1} + i_{e2})$$
$$V_2 = \frac{R_{S2}}{\beta}\, i_{e2} + r'_e\, i_{e2} + R_E\, (i_{e1} + i_{e2})$$

Again, assuming R_{S1} / β and R_{S2} / β are very small in comparison with R_E and r_e' and therefore neglecting these terms,

$$(r'_e + R_E)\, i_{e1} + R_E\, i_{e2} = v_1$$
$$R_E\, i_{e1} + (r'_e + R_E)\, i_{e2} = v_2$$

Solving these two equations, i_{e1} and i_{e2} can be calculated.

$$i_{e1} = \frac{(r_e + R_E)\, v_1 - R_E\, v_2}{(r'_e + R_E)^2 - R_E^2}$$
$$i_{e2} = \frac{(r'_e + R_E)\, v_2 - R_E\, v_1}{(r'_e + R_E)^2 - R_E^2}$$

The output voltage V_O is given by

$$V_O = V_{C2} - V_{C1}$$
$$= -R_C\, i_{C2} - (-R_C\, i_{C1})$$
$$= R_C\,(i_{C1} - i_{C2})$$
$$= R_C\,(i_{e1} - i_{e2})$$

Substituting i_{e1}, & i_{e2} in the above expression

$$v_o = R_C\left\{\frac{(r_e + R_E)V_1 - R_E V_2}{(r'_e + R_E)^2 - R_E^2} - \frac{(r_e + R_E)V_2 - R_E V_1}{(r'_e + R_E)^2 - R_E^2}\right\}$$
$$= \frac{R_C(v_1 - v_2)(r'_e - 2R_E)}{r'_e(r'_e + 2R_E)}$$
$$\text{Therefore}, v_o = \frac{R_C}{r'_e}(v_1 - v_2) \qquad \text{(E-1)}$$

Thus a differential amplifier amplifies the difference between two input signals. Defining the difference of input signals as $v_d = v_1 - v_2$ the voltage gain of the dual input balanced output differential amplifier can be given by

$$A_d = \frac{v_C}{v_d} = \frac{R_C}{r'_e} \qquad \text{(E-2)}$$

4.5 TUNED AMPLIFIERS

Tuned amplifiers are the amplifiers that are employed for the purpose of tuning. Tuning means selecting. Among a set of frequencies available, if there occurs a need to select a particular frequency, while rejecting all other frequencies, such a process is called Selection. This selection is done by using a circuit called as Tuned circuit.When an amplifier circuit has its load replaced by a tuned circuit, such an amplifier can be called as a Tuned amplifier circuit. The inductor and capacitor connected in parallel forms a tank circuit as shown in the figure.

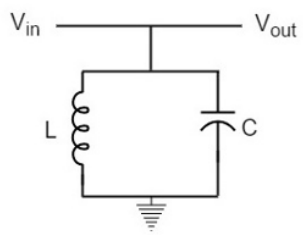

At resonance frequency the parallel resonant circuit offers high impedance which does not allows high current through it. A parallel resonant circuit offers low impedance for the frequencies far from the resonant frequency.

When the reactance of the inductor balances the reactance of the capacitor, in the tuned circuit at some frequency, such a frequency can be called as resonant frequency, it is denoted by f_r

$$2\pi f_L = \frac{1}{2\pi f_c}$$

$$f_r = \frac{1}{2\pi\sqrt{LC}}$$

QUALITY FACTOR

For a parallel resonance circuit, the sharpness of the resonance curve determines the selectivity. The smaller the resistance of the coil, the sharper the resonant curve will be. Hence the inductive reactance and resistance of the coil determine the quality of the tuned circuit.

The ratio of inductive reactance of the coil at resonance to its resistance is known as Quality factor. It is denoted by Q.

$$Q = \frac{X_L}{R} = \frac{2\pi f_r L}{R}$$

The range of frequencies at which the voltage gain of the tuned amplifier falls to 70.7% of the maximum gain is called its Bandwidth.The range of frequencies between f1 and f2 is called as bandwidth of the tuned amplifier. The bandwidth of a tuned amplifier depends upon the Q of the LC circuit i.e., upon the sharpness of the frequency response. The value of Q and the bandwidth are inversely proportional.The figure below details the bandwidth and frequency response of the tuned amplifier.

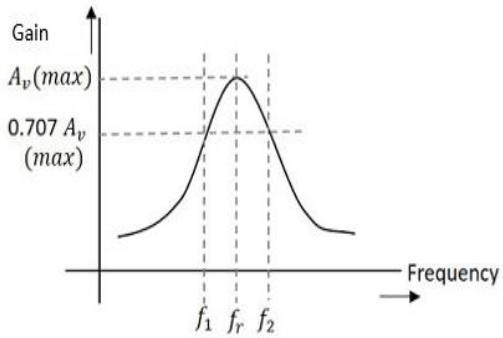

RELATION BETWEEN Q FACTOR AND BANDWIDTH

The quality factor Q of the bandwidth is defined as the ratio of resonant frequency to bandwidth, i.e.,

$$Q = \frac{f_r}{BW}$$

TYPES OF TUNED AMPLIFIERS

- Single Tuned Amplifier
- Double Tuned Amplifier
- Stagger Tuned Amplifier

4.6 SINGLE TUNED AMPLIFIER

An amplifier circuit with a single tuner section being at the collector of the amplifier circuit is called as Single tuner amplifier circuit.

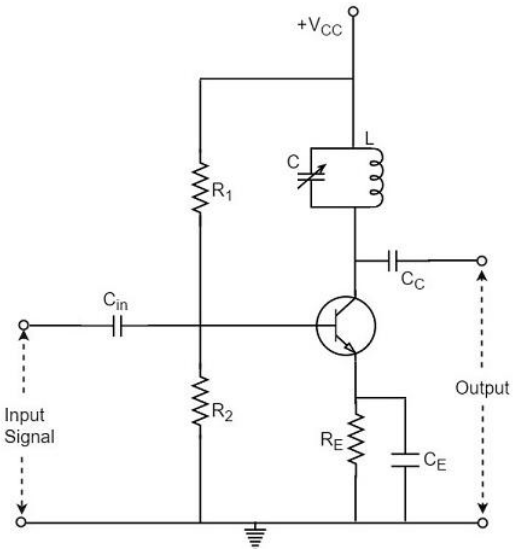

DOUBLE TUNED AMPLIFIERS

A double-tuned amplifier is a tuned amplifier with transformer coupling between the amplifier stages in which the inductances of both the primary and secondary windings are tuned separately with a capacitor across each. The scheme results in a wider bandwidth and steeper skirts than a single tuned

circuit would achieve. There is a critical value of transformer coupling coefficient at which the frequency response of the amplifier is maximally flat in the pass band and the gain is maximum at the resonant frequency.

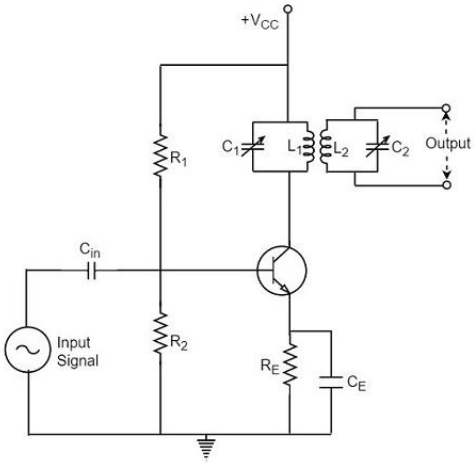

STAGGER TUNED AMPLIFIER

Staggered tuning is a technique used in the design of multi-stage tuned amplifiers whereby each stage is tuned to a slightly different frequency. In comparison to synchronous tuning (where each stage is tuned identically) it produces a wider bandwidth at the expense of reduced gain.

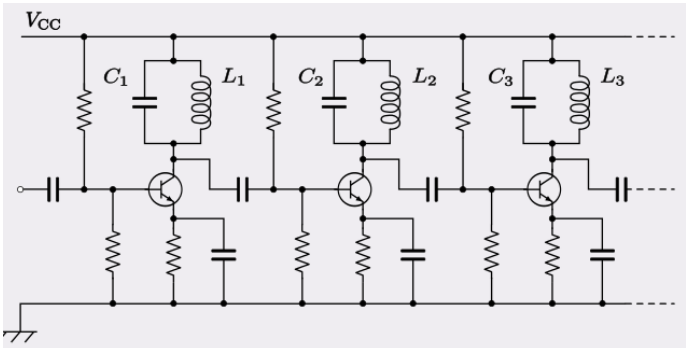

4.7 NEUTRALIZATION

At this frequency, the inter junction capacitance between base and collector, Cbc of the transistor becomes dominant, i.e., its reactance between low enough to be considered, which is otherwise infinite to be neglected as open circuit. Being CE configuration capacitance Cbe, shown in the ig. 3.35 come across input and output circuits of an amplifier. As reactance of Cbc at RF is low enough it provide the feedback path from collector to base. With this circuit condition, if some feedback signal manages to reach the input from output in a positive manner with proper phase shift, then there is possibility of circuit converted to a positive manner with proper phase shift, then there is possibility

of circuit converted to an unstable one, generating its own oscillations and can stop working as an amplifier.

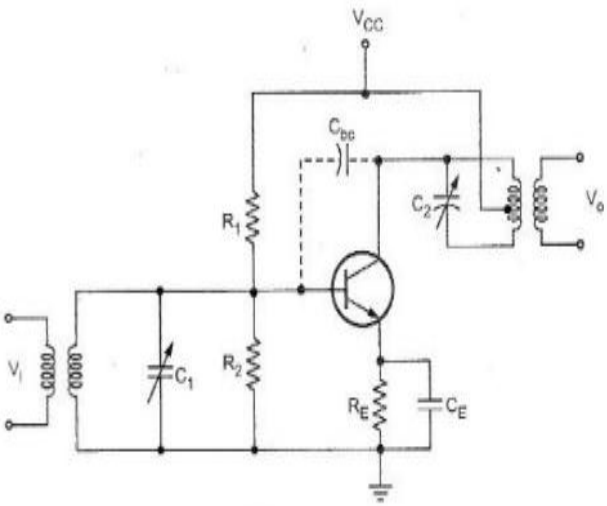

NEUTRALIZATION METHODS

- **HAZELINE NEUTRALIZATION**

The Fig shows the Hazeline circuit. In this circuit a small value of variable capacitance CN is connected from the bottom of coil, point B, to the base. Therefore, the internal capacitance Cbc, shown dotted, feeds a signal from the top end of the coil, point A, to the transistor base and the CN feeds a signal of equal magnitude but opposite polarity to the bottom of coil, point B, to the base. The neutralizing capacitor, CN can be adjusted correctly to completely nullify the signal through the Cbc.

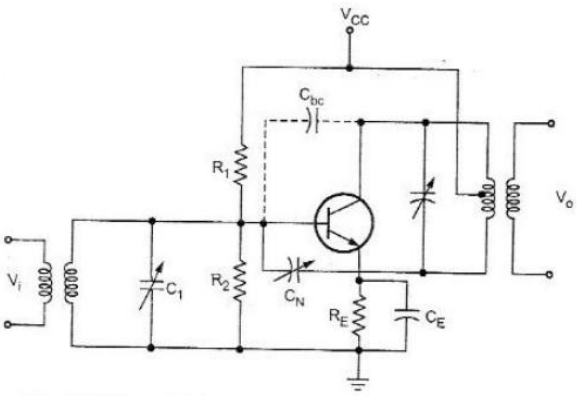

- **NEUTRALIZATION USING COIL**

The Figure shows the neutralization of RF amplifier using coil. In this circuit, L part of the tuned circuit at the base of next stage is oriented or minimum coupling to the other winding. It is wound on a separate from and is mounted at right angle to the coupled windings. If the windings are properly polarized, the voltage across L due to the circulating current in the base circuit will have the proper phase to cancel the signal coupled through the base to collector, Cbc capacitance.

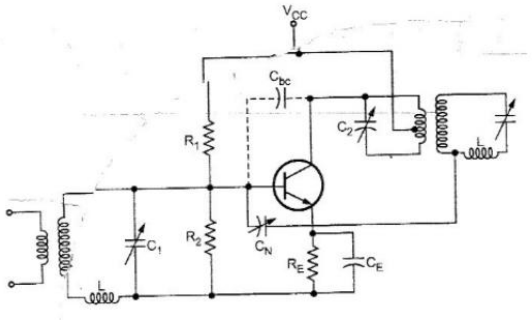

4.8 POWER AMPLIFIERS

The Power amplifiers amplify the power level of the signal. This amplification is done in the last stage in audio applications. The applications related to radio frequencies employ radio power amplifiers. But the operating point of a transistor, plays a very important role in determining the efficiency of the amplifier. The main classification is done based on this mode of operation.

CLASSIFICATION OF POWER AMPLIFIER

- On the basis of the mode of operation, i.e., the portion of the input cycle during which collector current flows, the power amplifiers may be classified as follows.
- Class A Power amplifier − When the collector current flows at all times during the full cycle of signal, the power amplifier is known as class A power amplifier.
- Class B Power amplifier − When the collector current flows only during the positive half cycle of the input signal, the power amplifier is known as class B power amplifier.

- Class C Power amplifier − When the collector current flows for less than half cycle of the input signal, the power amplifier is known as class C power amplifier.

CLASS A POWER AMPLIFIER

The operating point of this amplifier is present in the linear region. It is so selected that the current flows for the entire ac input cycle. The below figure explains the selection of operating point.

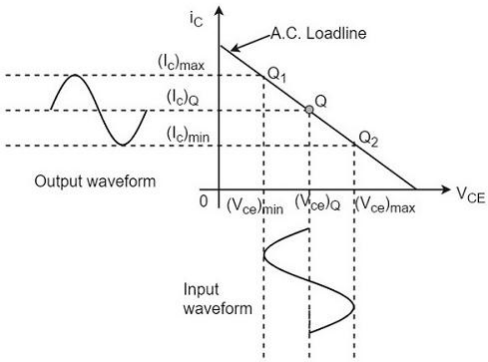

CLASS B POWER AMPLIFIER

The operating point is selected to be at collector cut off voltage. So, when the signal is applied, only the positive half cycle is amplified at the output.

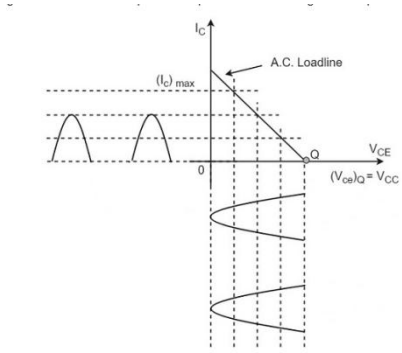

CLASS C POWER AMPLIFIER

The operating point is selected to be at below the cut off voltage. So, when the signal is applied, the collector current flows for less than half cycle of the input signal.

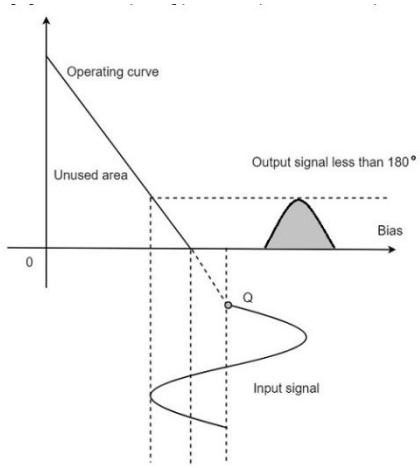

ANALYSIS OF CLASS A POWER AMPLIFIER

$$P_{in} = voltage \times current = V_{CC}(I_C)_Q$$

This power is used in the following two parts –

- Power dissipated in the collector load as heat is given by

$$P_{RC} = (current)^2 \times resistance = (I_C)_Q^2 R_C$$

- Power given to transistor is given by

$$P_{tr} = P_{in} - P_{RC} = V_{CC} - (I_C)_Q^2 R_C$$

TRANSFORMER COUPLED CLASS A POWER AMPLIFIER

The disadvantages of class A power amplifier are, it has such as low output power and efficiency. In order to minimize those effects, the transformer coupled class A power amplifier has been introduced.

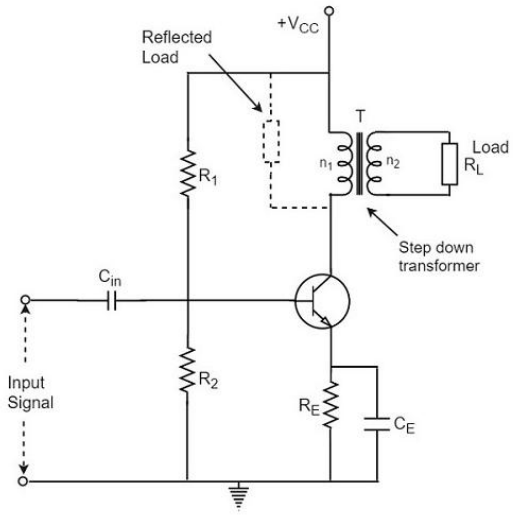

ANALYSIS OF TRANSFORMER COUPLED CLASS A POWER AMPLIFIER

The power loss in the primary is assumed to be negligible, as its resistance is very small.

The input power under dc condition will be

$$(P_{in})_{dc} = (P_{tr})_{dc} = V_{CC} \times (I_C)_Q$$

Therefore,

$$(P_O)_{ac} = V_{rms} \times I_{rms} = \frac{V_{CC}}{\sqrt{2}} \times \frac{(I_C)_Q}{\sqrt{2}} = \frac{V_{CC} \times (I_C)_Q}{2}$$

Therefore,

$$\text{Collector Efficiency} = \frac{(P_O)_{ac}}{(P_{tr})_{dc}}$$

Or,

$$(\eta)_{collector} = \frac{V_{CC} \times (I_C)_Q}{2 \times V_{CC} \times (I_C)_Q} = \frac{1}{2}$$

$$= \frac{1}{2} \times 100 = 50\%$$

4.9 FET INPUT STAGES

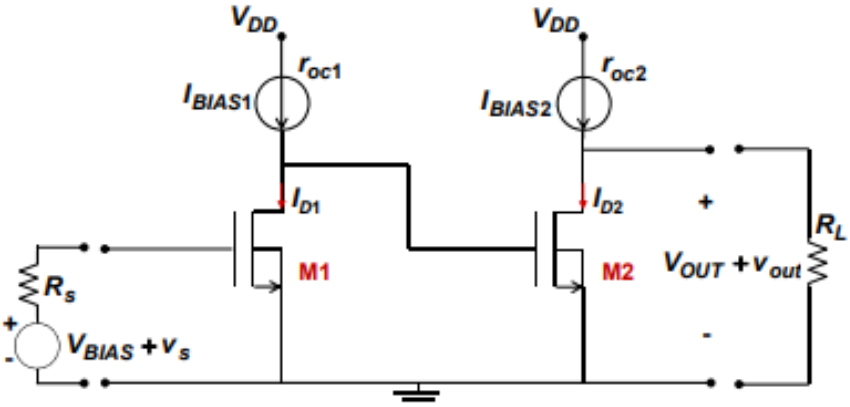
VDD
VDD
roc1
roc2
IBIAS1
IBIAS2
ID1
ID2
M1
M2
RL
Rs
VOUT + vout
VBIAS + vs

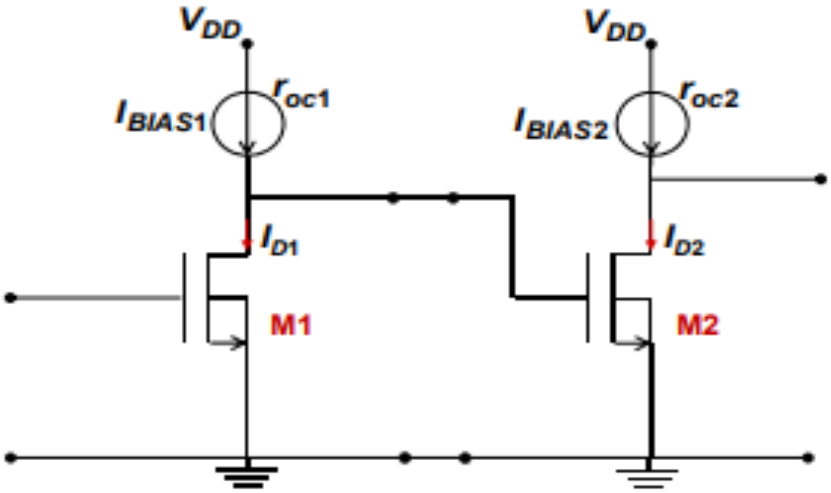
VDD
VDD
roc1
roc2
IBIAS1
IBIAS2
ID1
ID2
M1
M2

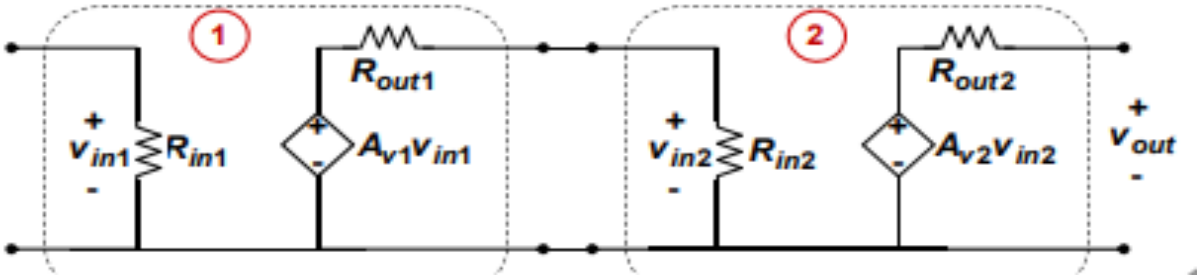
1
2
Rout1
Rout2
vin1
Rin1
Av1vin1
vin2
Rin2
Av2vin2
vout

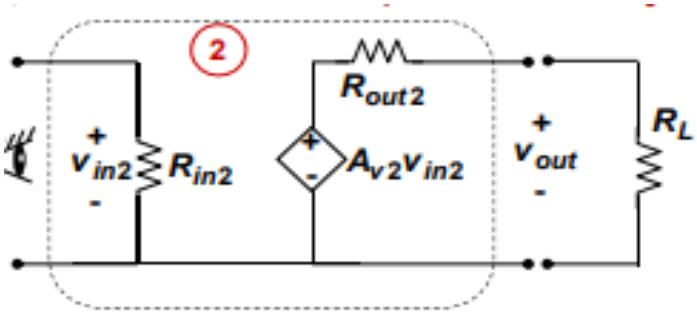

1) First find R_{in2} (input resistance of the last stage):

Make sure R_L is in place!!

$$R_{in2} = \infty$$

2) Then find R_{in1} (input resistance of the second last stage):

Make sure R_{in2} is in place!!

$$R_{in1} = \infty$$

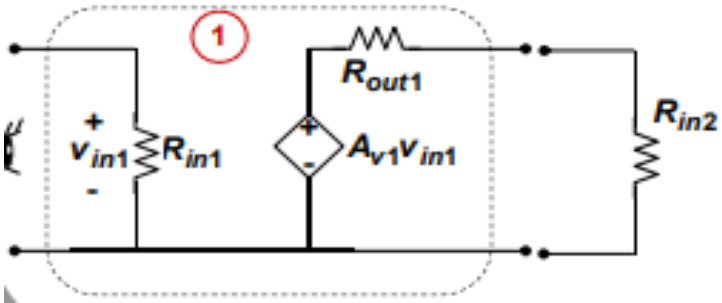

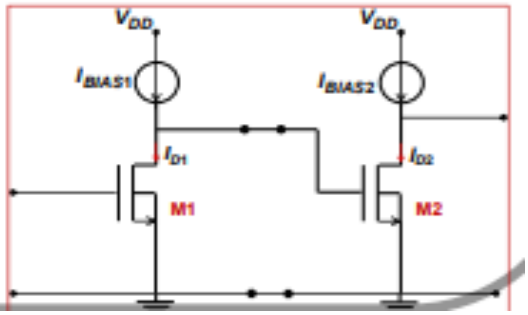

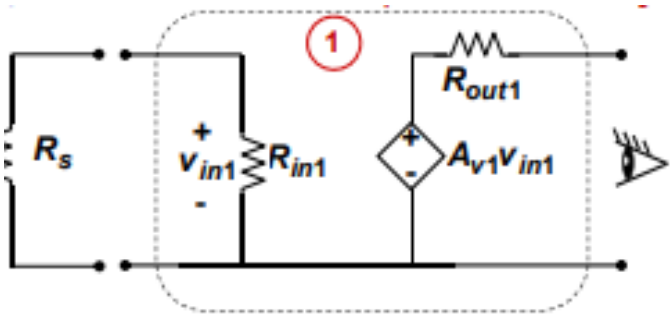

1) First find R_{out1} (output resistance of the first stage):

Make sure R_S is in place!!

$$R_{out1} = (r_{o1} \parallel r_{oc1})$$

2) Then find R_{out2} (output resistance of the second stage):

Make sure R_{out1} is in place!!

$$R_{out2} = (r_{o2} \parallel r_{oc2})$$

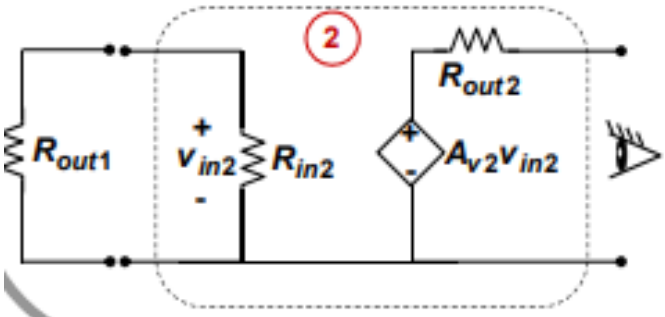

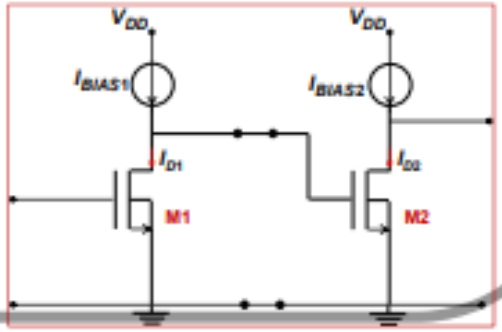

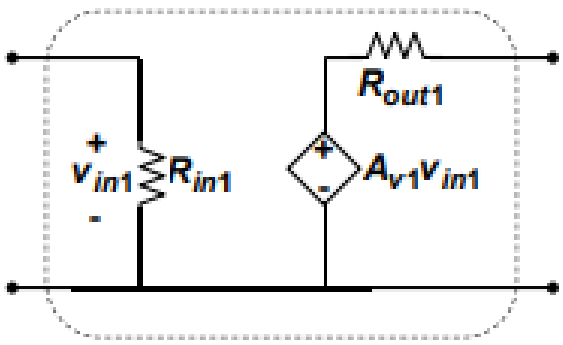

Open circuit voltage gains of CS stages do not depend on how the stages are connected (i.e. on source or load resistances)

Stage 1 Parameters:

$$R_{in1} = \infty$$
$$R_{out1} = (r_{o1} \parallel r_{oc1})$$
$$A_{v1} = -g_{m1}(r_{o1} \parallel r_{oc1})$$

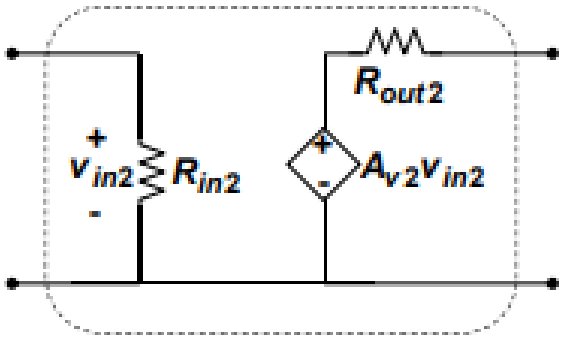

Stage 2 Parameters:

$$R_{in2} = \infty$$
$$R_{out2} = (r_{o2} \parallel r_{oc2})$$
$$A_{v2} = -g_{m2}(r_{o2} \parallel r_{oc2})$$

SATHYABAMA
INSTITUTE OF SCIENCE AND TECHNOLOGY
(DEEMED TO BE UNIVERSITY)
Accredited "A" Grade by NAAC | 12B Status by UGC | Approved by AICTE
www.sathyabama.ac.in

SCHOOL OF ELECTRICAL AND ELECTRONICS

DEPARTMENT OF ELECTRICAL AND ELECTRONICS ENGINEERING

UNIT - 5

Electronic Devices and Circuits-SECA1306

5.1 ADVANTAGES OF NEGATIVE FEEDBACK

- Stability of gain is improved
- Reduction in distortion
- Reduction in noise
- Increase in input impedance
- Decrease in output impedance
- Increase in the range of uniform application

5.2 VOLTAGE SERIES FEEDBACK

In the voltage series feedback circuit, a fraction of the output voltage is applied in series with the input voltage through the feedback circuit. This is also known as shunt-driven series-fed feedback, i.e., a parallel-series circuit.The following figure shows the block diagram of voltage series feedback, by which it is evident that the feedback circuit is placed in shunt with the output but in series with the input.

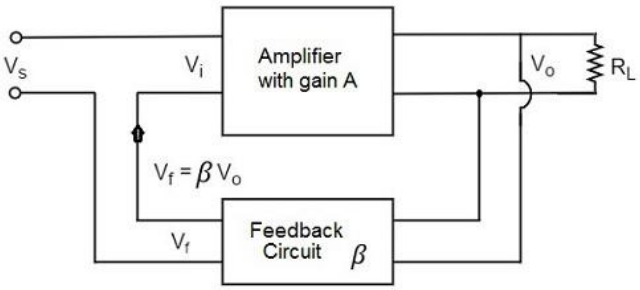

As the feedback circuit is connected in shunt with the output, the output impedance is decreased and due to the series connection with the input, the input impedance is increased.

5.3 VOLTAGE-SHUNT FEEDBACK

In the voltage shunt feedback circuit, a fraction of the output voltage is applied in parallel with the input voltage through the feedback network. This is also known as shunt-driven shunt-fed feedback i.e., a parallel-parallel proto type.The below figure shows the block diagram of voltage shunt feedback, by which it is evident that the feedback circuit is placed in shunt with the output and also with the input.

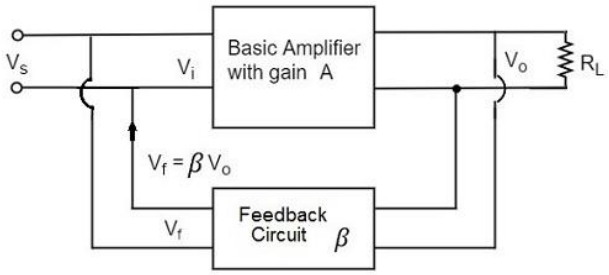

As the feedback circuit is connected in shunt with the output and the input as well, both the output impedance and the input impedance are decreased.

5.4 CURRENT-SERIES FEEDBACK

In the current series feedback circuit, a fraction of the output voltage is applied in series with the input voltage through the feedback circuit. This is also known as series-driven series-fed feedback i.e., a series-series circuit.The following figure shows the block diagram of current series feedback, by which it is evident that the feedback circuit is placed in series with the output and also with the input.

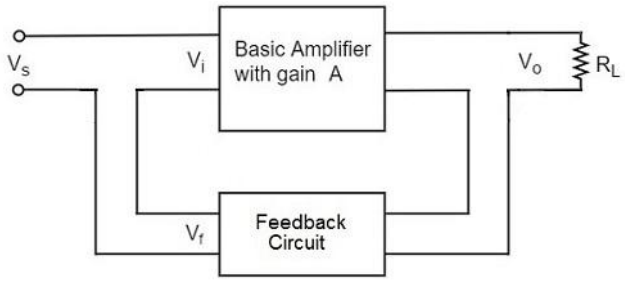

As the feedback circuit is connected in series with the output and the input as well, both the output impedance and the input impedance are increased.

5.5 CURRENT-SHUNT FEEDBACK

In the current shunt feedback circuit, a fraction of the output voltage is applied in series with the input voltage through the feedback circuit. This is also known as series-driven shunt-fed feedback i.e., a series-parallel circuit. The below figure shows the block diagram of current shunt feedback, by which it is evident that the feedback circuit is placed in series with the output but in parallel with the input.

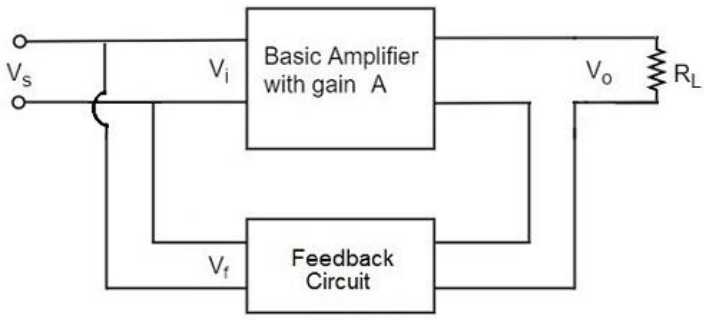

As the feedback circuit is connected in series with the output, the output impedance is increased and due to the parallel connection with the input, the input impedance is decreased. Let us now tabulate the amplifier characteristics that get affected by different types of negative feedbacks.

5.6 POSITIVE FFEDBACK

The feedback in which the feedback energy i.e., either voltage or current is in phase with the input signal and thus aids it is called as Positive feedback.Both the input signal and feedback signal introduces a phase shift of 180o thus making a 360o resultant phase shift around the

loop, to be finally in phase with the input signal.Though the positive feedback increases the gain of the amplifier, it has the disadvantages such as

- Increasing distortion
- Instability

It is because of these disadvantages the positive feedback is not recommended for the amplifiers. If the positive feedback is sufficiently large, it leads to oscillations, by which oscillator circuits are formed.

5.7 CONDITION FOR OSCILLATION

- If $A\beta = 1$, $A_f = \infty$. Thus the gain becomes infinity, i.e., there is output without any input. In another words, the amplifier works as an Oscillator.
- The condition $A\beta = 1$ is called as **Barkhausen Criterion of oscillations**. This is a very important factor to be always kept in mind, in the concept of Oscillators.

Table Effects of Feedback[a]

Feedback Type	x_s	x_o	Gain Stabilized	Input Impedance	Output Impedance	Ideal Amplifier
Series voltage	v_s	v_o	$A_{vf} = \frac{A_v}{1 + A_v\beta}$	$R_i(1 + A_v\beta)$	$\frac{R_o}{1 + \beta A_{voc}}$	Voltage
Series current	v_s	i_o	$G_{mf} = \frac{G_m}{1 + G_m\beta}$	$R_i(1 + G_m\beta)$	$R_o(1 + \beta G_{msc})$	Transconductance
Parallel voltage	i_s	v_o	$R_{mf} = \frac{R_m}{1 + R_m\beta}$	$\frac{R_i}{1 + R_m\beta}$	$\frac{R_o}{1 + \beta R_{moc}}$	Transresistance
Parallel current	i_s	i_o	$A_{if} = \frac{A_i}{1 + A_i\beta}$	$\frac{R_i}{1 + A_i\beta}$	$R_o(1 + \beta A_{isc})$	Current

[a] Formulas given assume an ideal controlled source for the feedback network (as shown in Figure 9.14), zero source impedance for series feedback, and infinite source impedance for parallel feedback. Gains with subscripts sc and oc are for short-circuit and open-circuit loads, respectively. The gains A_v, G_m, R_m, and A_i are for the actual load.

5.8 PHASE SHIFT OSCILLATOR

Principle of Phase-shift oscillators

We know that the output voltage of an RC circuit for a sinewave input leads the input voltage. The phase angle by which it leads is determined by the value of RC components used in the circuit. The following circuit diagram shows a single section of an RC network.

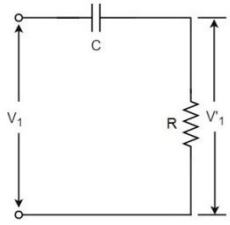

The output voltage V_1' across the resistor R leads the input voltage applied input V_1 by some phase angle ϕ^o. If R were reduced to zero, V_1' will lead the V_1 by 90° i.e., $\phi^o = 90^o$.

However, adjusting R to zero would be impracticable, because it would lead to no voltage across R. Therefore, in practice, R is varied to such a value that makes V_1' to lead V_1 by 60°. The following circuit diagram shows the three sections of the RC network.

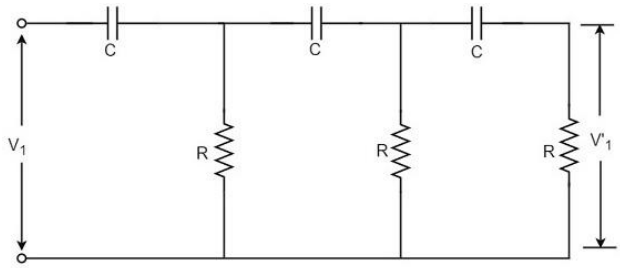

Each section produces a phase shift of 60°. Consequently, a total phase shift of 180° is produced, i.e., voltage V_2 leads the voltage V_1 by 180°.

Phase-shift Oscillator Circuit

The oscillator circuit that produces a sine wave using a phase-shift network is called as a Phase-shift oscillator circuit. The constructional details and operation of a phase-shift oscillator circuit are as given below.

Construction

The phase-shift oscillator circuit consists of a single transistor amplifier section and a RC phase-shift network. The phase shift network in this circuit, consists of three RC sections. At the resonant frequency f_o, the phase shift in each RC section is 60° so that the total phase shift produced by RC network is 180°.

The following circuit diagram shows the arrangement of an RC phase-shift oscillator.

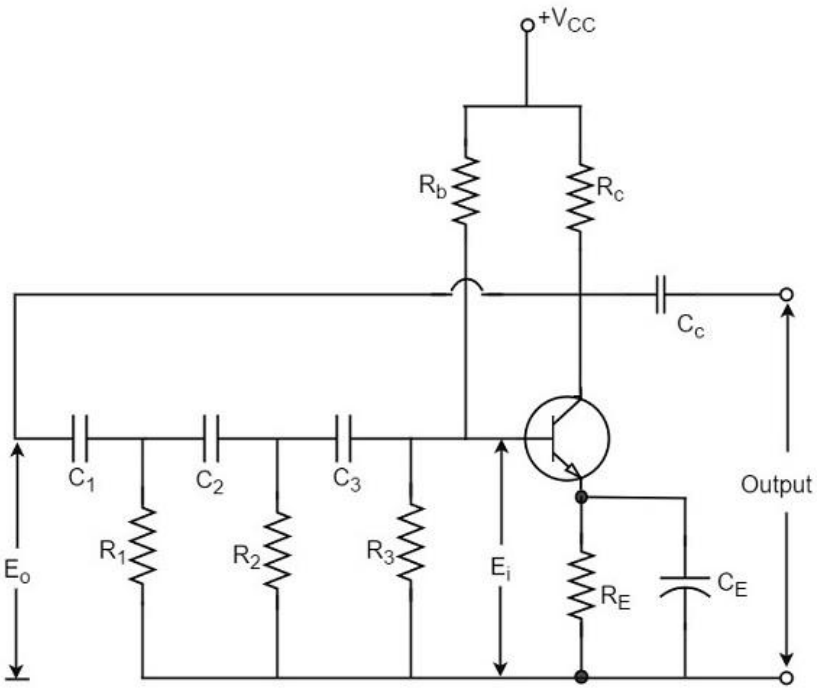

The frequency of oscillations is given by

$$fo=1/2\pi RC\sqrt{6}$$

Where

$$R1=R2=R3=R$$

$$C1=C2=C3=C$$

Operation

The circuit when switched ON oscillates at the resonant frequency f_o. The output E_o of the amplifier is fed back to RC feedback network. This network produces a phase shift of 180° and a voltage E_i appears at its output. This voltage is applied to the transistor amplifier.

The feedback applied will be

m=Ei/Eom=Ei/Eo

The feedback is in correct phase, whereas the transistor amplifier, which is in CE configuration, produces a 180° phase shift. The phase shift produced by network and the transistor add to form a phase shift around the entire loop which is 360°.

Advantages

The advantages of RC phase shift oscillator are as follows −

- It does not require transformers or inductors.
- It can be used to produce very low frequencies.
- The circuit provides good frequency stability.

Disadvantages

The disadvantages of RC phase shift oscillator are as follows −

- Starting the oscillations is difficult as the feedback is small.
- The output produced is small.

5.9 WEIN BRIDGE OSCILLATOR

Another type of popular audio frequency oscillator is the Wien bridge oscillator circuit. This is mostly used because of its important features. This circuit is free from the circuit fluctuations and the ambient temperature.The main advantage of this oscillator is that the frequency can be varied in the range of 10Hz to about 1MHz whereas in RC oscillators, the frequency is not varied.

Construction

The circuit construction of Wien bridge oscillator can be explained as below. It is a two-stage amplifier with RC bridge circuit. The bridge circuit has the arms R_1C_1, R_3, R_2C_2 and the tungsten lamp L_p. Resistance R_3 and the lamp L_p are used to stabilize the amplitude of the output.The following circuit diagram shows the arrangement of a Wien bridge oscillator.

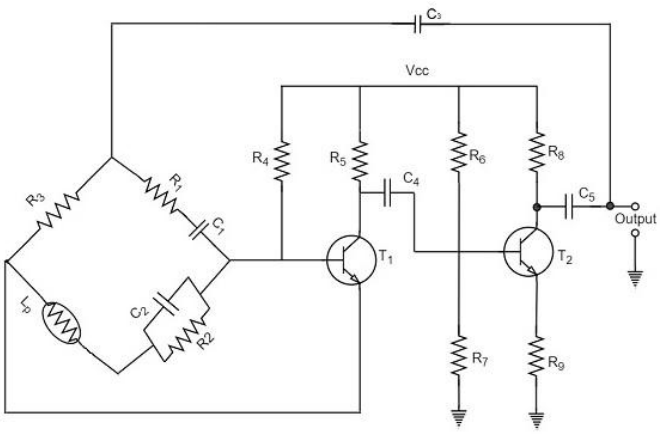

The transistor T_1 serves as an oscillator and an amplifier while the other transistor T_2 serves as an inverter. The inverter operation provides a phase shift of 180°. This circuit provides positive feedback through R_1C_1, C_2R_2 to the transistor T_1 and negative feedback through the voltage divider to the input of transistor T_2.

The frequency of oscillations is determined by the series element R_1C_1 and parallel element R_2C_2 of the bridge.

$$f=1/2\pi\sqrt{R1C1R2C2}$$

If $R_1 = R_2$ and $C_1 = C_2 = C$

Then,

$$f=1/2\pi RC$$

Now, we can simplify the above circuit as follows −

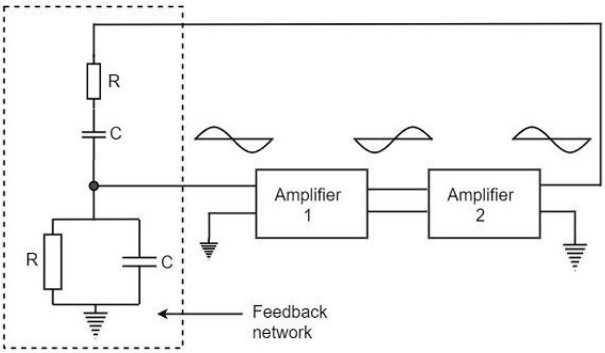

The oscillator consists of two stages of RC coupled amplifier and a feedback network. The voltage across the parallel combination of R and C is fed to the input of amplifier 1. The net phase shift through the two amplifiers is zero.

The usual idea of connecting the output of amplifier 2 to amplifier 1 to provide signal regeneration for oscillator is not applicable here as the amplifier 1 will amplify signals over a wide range of frequencies and hence direct coupling would result in poor frequency stability. By adding Wien bridge feedback network, the oscillator becomes sensitive to a particular frequency and hence frequency stability is achieved.

Operation

When the circuit is switched ON, the bridge circuit produces oscillations of the frequency stated above. The two transistors produce a total phase shift of 360° so that proper positive feedback is ensured. The negative feedback in the circuit ensures constant output. This is achieved by temperature sensitive tungsten lamp L_p. Its resistance increases with current.

If the amplitude of the output increases, more current is produced and more negative feedback is achieved. Due to this, the output would return to the original value. Whereas, if the output tends to decrease, reverse action would take place.

Advantages

The advantages of Wien bridge oscillator are as follows −

- The circuit provides good frequency stability.
- It provides constant output.
- The operation of circuit is quite easy.
- The overall gain is high because of two transistors.
- The frequency of oscillations can be changed easily.
- The amplitude stability of the output voltage can be maintained more accurately, by replacing R_2 with a thermistor.

Disadvantages

The disadvantages of Wien bridge oscillator are as follows −

- The circuit cannot generate very high frequencies.
- Two transistors and number of components are required for the circuit construction.

5.10 HARTLEY OSCILLATOR

A very popular local oscillator circuit that is mostly used in radio receivers is the Hartley Oscillator circuit. The constructional details and operation of a Hartley oscillator are as discussed below.

Construction

In the circuit diagram of a Hartley oscillator shown below, the resistors R_1, R_2 and R_e provide necessary bias condition for the circuit. The capacitor C_e provides a.c. ground thereby providing any signal degeneration. This also provides temperature stabilization.The capacitors C_c and C_b are employed to block d.c. and to provide an a.c. path. The radio frequency choke (R.F.C) offers very high impedance to high frequency currents which means it shorts for d.c. and opens for a.c. Hence it provides d.c. load for collector and keeps a.c. currents out of d.c. supply source

Tank Circuit

The frequency determining network is a parallel resonant circuit which consists of the inductors L_1 and L_2 along with a variable capacitor C. The junction of L_1 and L_2 are earthed. The coil L_1 has its one end connected to base via C_c and the other to emitter via C_e. So, L_2 is in the output circuit. Both the coils L_1 and L_2 are inductively coupled and together form an Auto-transformer.The following circuit diagram shows the arrangement of a Hartley oscillator. The tank circuit is shunt fed in this circuit. It can also be a series-fed.

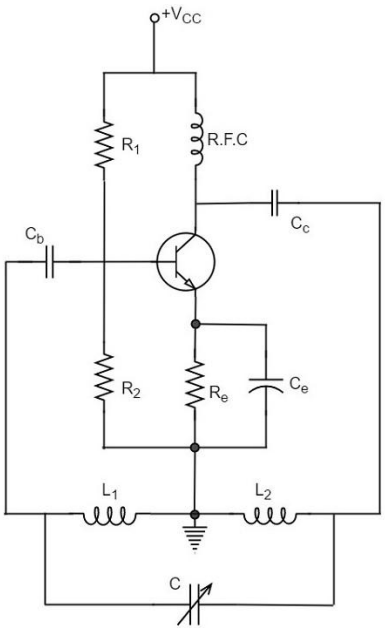

Operation

When the collector supply is given, a transient current is produced in the oscillatory or tank circuit. The oscillatory current in the tank circuit produces a.c. voltage across L_1.

The auto-transformer made by the inductive coupling of L_1 and L_2 helps in determining the frequency and establishes the feedback. As the CE configured transistor provides 180° phase shift, another 180° phase shift is provided by the transformer, which makes 360° phase shift between the input and output voltages.

This makes the feedback positive which is essential for the condition of oscillations. When the loop gain $|\beta A|$ of the amplifier is greater than one, oscillations are sustained in the circuit.

Frequency

The equation for frequency of Hartley oscillator is given as

$$f=1/2\pi\sqrt{L_T C}$$

$$L_T=L1+L2+2M$$

Here, L_T is the total cumulatively coupled inductance; L_1 and L_2 represent inductances of 1st and 2nd coils; and M represents mutual inductance.

Mutual inductance is calculated when two windings are considered.

Advantages

The advantages of Hartley oscillator are

- Instead of using a large transformer, a single coil can be used as an auto-transformer.
- Frequency can be varied by employing either a variable capacitor or a variable inductor.
- Less number of components are sufficient.
- The amplitude of the output remains constant over a fixed frequency range.

Disadvantages

The disadvantages of Hartley oscillator are

- It cannot be a low frequency oscillator.
- Harmonic distortions are present.

Applications

The applications of Hartley oscillator are

- It is used to produce a sinewave of desired frequency.
- Mostly used as a local oscillator in radio receivers.
- It is also used as R.F. Oscillator.

5.11 COLPITTS OSCILLATOR

A Colpitts oscillator looks just like the Hartley oscillator but the inductors and capacitors are replaced with each other in the tank circuit. The constructional details and operation of a colpitts oscillator are as discussed below.

Construction

Let us first take a look at the circuit diagram of a Colpitts oscillator.

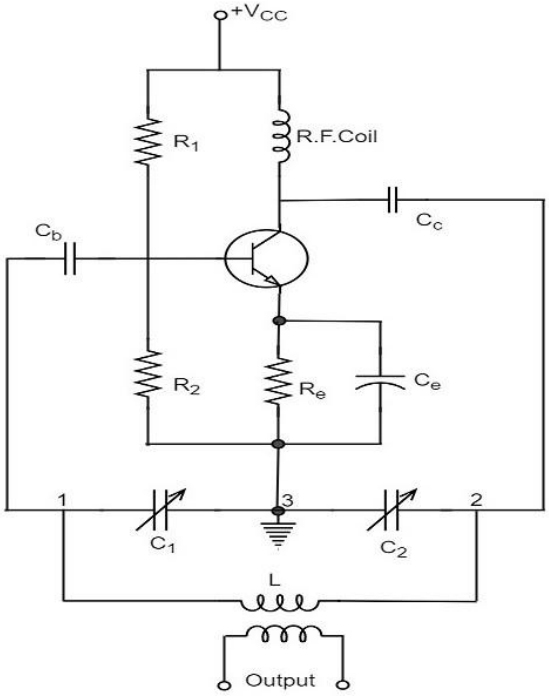

The resistors R_1, R_2 and R_e provide necessary bias condition for the circuit. The capacitor C_e provides a.c. ground thereby providing any signal degeneration. This also provides temperature stabilization.The capacitors C_c and C_b are employed to block d.c. and to provide an a.c. path. The radio frequency choke (R.F.C) offers very high impedance to high frequency currents which means it shorts for d.c. and opens for a.c. Hence it provides d.c. load for collector and keeps a.c. currents out of d.c. supply source.

Tank Circuit

The frequency determining network is a parallel resonant circuit which consists of variable capacitors C_1 and C_2 along with an inductor L. The junction of C_1 and C_2 are earthed. The capacitor C_1 has its one end connected to base via C_c and the other to emitter via C_e. the voltage developed across C_1 provides the regenerative feedback required for the sustained oscillations.

Operation

When the collector supply is given, a transient current is produced in the oscillatory or tank circuit. The oscillatory current in the tank circuit produces a.c. voltage across C_1 which are applied to the base emitter junction and appear in the amplified form in the collector circuit and supply losses to the tank circuit.If terminal 1 is at positive potential with respect to terminal 3 at any instant, then terminal 2 will be at negative potential with respect to 3 at that instant because terminal 3 is grounded. Therefore, points 1 and 2 are out of phase by 180°.

As the CE configured transistor provides 180° phase shift, it makes 360° phase shift between the input and output voltages. Hence, feedback is properly phased to produce continuous Undamped oscillations. When the loop gain $|\beta A|$ of the amplifier is greater than one, oscillations are sustained in the circuit.

Frequency

The equation for frequency of Colpitts oscillator is given as

$$f=1/2\pi\sqrt{LC_T}$$

C_T is the total capacitance of C_1 and C_2 connected in series.

$$1/CT=1/C1+1/C2$$

$$CT=C1\times C2/C1+C2$$

Advantages

The advantages of Colpitts oscillator are as follows −

- Colpitts oscillator can generate sinusoidal signals of very high frequencies.
- It can withstand high and low temperatures.
- The frequency stability is high.
- Frequency can be varied by using both the variable capacitors.
- Less number of components are sufficient.
- The amplitude of the output remains constant over a fixed frequency range.

The Colpitts oscillator is designed to eliminate the disadvantages of Hartley oscillator and is known to have no specific disadvantages. Hence there are many applications of a colpitts oscillator.

Applications

The applications of Colpitts oscillator are as follows −

- Colpitts oscillator can be used as High frequency sinewave generator.
- This can be used as a temperature sensor with some associated circuitry.
- Mostly used as a local oscillator in radio receivers.
- It is also used as R.F. Oscillator.
- It is also used in Mobile applications.
- It has got many other commercial applications.

5.12 CRYSTAL OSCILLATOR

The principle of crystal oscillators depends upon the Piezo electric effect. The natural shape of a crystal is hexagonal. When a crystal wafer is cur perpendicular to X-axis, it is called as X-cut and when it is cut along Y-axis, it is called as Y-cut.The crystal used in crystal oscillator exhibits a property called as Piezo electric property. So, let us have an idea on piezo electric effect.

Piezo Electric Effect

The crystal exhibits the property that when a mechanical stress is applied across one of the faces of the crystal, a potential difference is developed across the opposite faces of the crystal. Conversely, when a potential difference is applied across one of the faces, a mechanical stress is produced along the other faces. This is known as Piezo electric effect.Certain crystalline materials like Rochelle salt, quartz and tourmaline exhibit piezo electric effect and such materials are called as Piezo electric crystals. Quartz is the most commonly used piezo electric crystal because it is inexpensive and readily available in nature.When a piezo electric crystal is subjected to a proper alternating potential, it vibrates mechanically. The amplitude of mechanical vibrations becomes maximum when the frequency of alternating voltage is equal to the natural frequency of the crystal.

Working of a Quartz Crystal

In order to make a crystal work in an electronic circuit, the crystal is placed between two metal plates in the form of a capacitor. Quartz is the mostly used type of crystal because of its availability and strong nature while being inexpensive. The ac voltage is applied in parallel to the crystal.

The circuit arrangement of a Quartz Crystal will be as shown below −

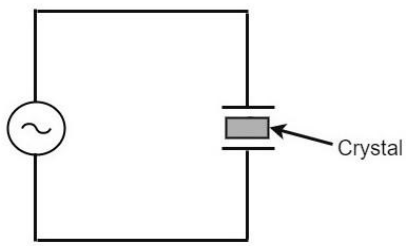

If an AC voltage is applied, the crystal starts vibrating at the frequency of the applied voltage. However, if the frequency of the applied voltage is made equal to the natural frequency of the crystal, resonance takes place and crystal vibrations reach a maximum value. This natural frequency is almost constant.

Equivalent circuit of a Crystal

If we try to represent the crystal with an equivalent electric circuit, we have to consider two cases, i.e., when it vibrates and when it doesn't. The figures below represent the symbol and electrical equivalent circuit of a crystal respectively.

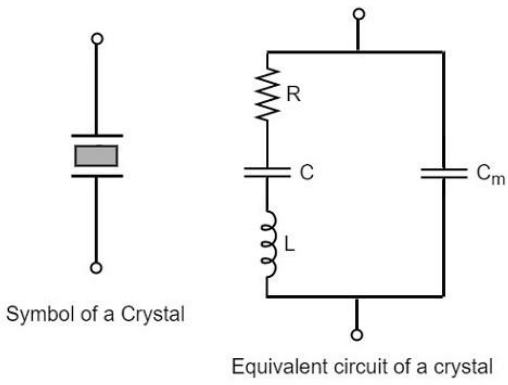

The above equivalent circuit consists of a series R-L-C circuit in parallel with a capacitance C_m. When the crystal mounted across the AC source is not vibrating, it is equivalent to the capacitance C_m. When the crystal vibrates, it acts like a tuned R-L-C circuit.

Frequency response

The frequency response of a crystal is as shown below. The graph shows the reactance (X_L or X_C) versus frequency (f). It is evident that the crystal has two closely spaced resonant frequencies.

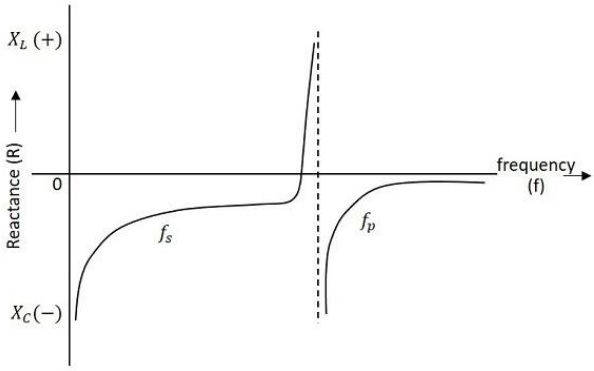

The first one is the series resonant frequency (f_s), which occurs when reactance of the inductance (L) is equal to the reactance of the capacitance C. In that case, the impedance of the equivalent circuit is equal to the resistance R and the frequency of oscillation is given by the relation,

$$f=1/2\pi\sqrt{L.C}$$

The second one is the parallel resonant frequency (f_p), which occurs when the reactance of R-L-C branch is equal to the reactance of capacitor C_m. At this frequency, the crystal offers a very high impedance to the external circuit and the frequency of oscillation is given by the relation.

$$f_p=1/2\pi L.C_T$$

Where

$$CT=CC_m/(C+Cm)$$

The value of C_m is usually very large as compared to C. Therefore, the value of C_T is approximately equal to C and hence the series resonant frequency is approximately equal to the parallel resonant frequency (i.e., $f_s = f_p$).

Crystal Oscillator Circuit

A crystal oscillator circuit can be constructed in a number of ways like a Crystal controlled tuned collector oscillator, a Colpitts crystal oscillator, a Clap crystal oscillator etc. But the transistor pierce crystal oscillator is the most commonly used one. This is the circuit which is normally referred as a crystal oscillator circuit.

The following circuit diagram shows the arrangement of a transistor pierce crystal oscillator.

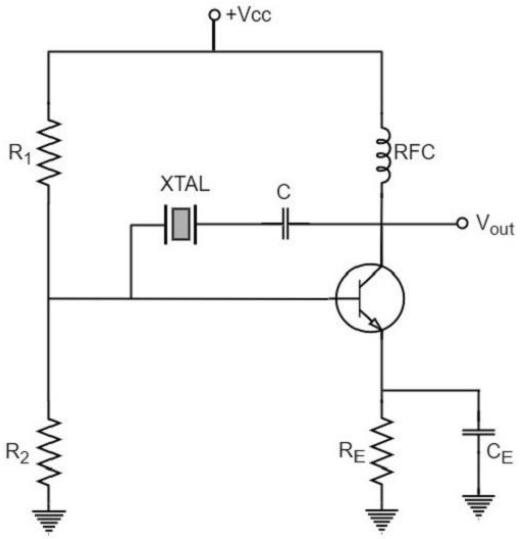

In this circuit, the crystal is connected as a series element in the feedback path from collector to the base. The resistors R_1, R_2 and R_E provide a voltage-divider stabilized d.c. bias circuit. The capacitor C_E provides a.c. bypass of the emitter resistor and RFC (radio frequency choke) coil provides for d.c. bias while decoupling any a.c. signal on the power lines from affecting the output signal. The coupling capacitor C has negligible impedance at the circuit operating frequency. But it blocks any d.c. between collector and base.

The circuit frequency of oscillation is set by the series resonant frequency of the crystal and its value is given by the relation,

$$f_o=1/2\pi\sqrt{L.C}$$

It may be noted that the changes in supply voltage, transistor device parameters etc. have no effect on the circuit operating frequency, which is held stabilized by the crystal.

Advantages

The advantages of crystal oscillator are as follows −

- They have a high order of frequency stability.
- The quality factor (Q) of the crystal is very high.

Disadvantages

The disadvantages of crystal oscillator are as follows −

- They are fragile and can be used in low power circuits.
- The frequency of oscillations cannot be changed appreciably.

Frequency Stability of an Oscillator

An Oscillator is expected to maintain its frequency for a longer duration without any variations, so as to have a smoother clear sinewave output for the circuit operation. Hence the term frequency stability really matters a lot, when it comes to oscillators, whether sinusoidal or non-sinusoidal.

The frequency stability of an oscillator is defined as the ability of the oscillator to maintain the required frequency constant over a long time interval as possible. Let us try to discuss the factors that affect this frequency stability.

Change in operating point

We have already come across the transistor parameters and learnt how important an operating point is. The stability of this operating point for the transistor being used in the circuit for amplification (BJT or FET), is of higher consideration.

The operating of the active device used is adjusted to be in the linear portion of its characteristics. This point is shifted due to temperature variations and hence the stability is affected.

Variation in temperature

The tank circuit in the oscillator circuit, contains various frequency determining components such as resistors, capacitors and inductors. All of their parameters are temperature dependent. Due to the change in temperature, their values get affected. This brings the change in frequency of the oscillator circuit.

Due to power supply

The variations in the supplied power will also affect the frequency. The power supply variations lead to the variations in V_{cc}. This will affect the frequency of the oscillations produced.

In order to avoid this, the regulated power supply system is implemented. This is in short called as RPS.

Change in output load

The variations in output resistance or output load also affect the frequency of the oscillator. When a load is connected, the effective resistance of the tank circuit is changed. As a result, the Q-factor of LC tuned circuit is changed. This results a change in output frequency of oscillator.

Changes in inter-element capacitances

Inter-element capacitances are the capacitances that develop in PN junction materials such as diodes and transistors. These are developed due to the charge present in them during their operation.

The inter element capacitors undergo change due to various reasons as temperature, voltage etc. This problem can be solved by connecting swamping capacitor across offending inter-element capacitor.

Value of Q

The value of Q (Quality factor) must be high in oscillators. The value of Q in tuned oscillators determine the selectivity. As this Q is directly proportional to the frequency stability of a tuned circuit, the value of Q should be maintained high.

Frequency stability can be mathematically represented as,

$$S_w = d\theta/dw$$

Where $d\theta$ is the phase shift introduced for a small frequency change in nominal frequency f_r. The circuit giving the larger value of $(d\theta/dw)$ has more stable oscillatory frequency.